ECEN 667
Power System Stability

Lecture 10: Synchronous Machine and Exciter Modeling

Prof. Tom Overbye
Dept. of Electrical and Computer Engineering
Texas A&M University
overbye@tamu.edu

TEXAS A&M UNIVERSITY

Announcements

- Read Chapter 5; look at Appendix A
- Homework 3 should be done before the first exam, but does not need to be turned in.
- First exam is on Tuesday October 3 during class (except for the distance education students)
  - It is closed-book and closed-notes, but one 8.5 by 11 inch hand written note sheet and calculators allowed
  - My first exam from ECEN 667 in Fall 2021 has been posted to Canvas

Visualization of Worldwide Electric Grids

The website **openinframap.org** visualizes the worldwide electric grid information contained in the OpenStreetMap database

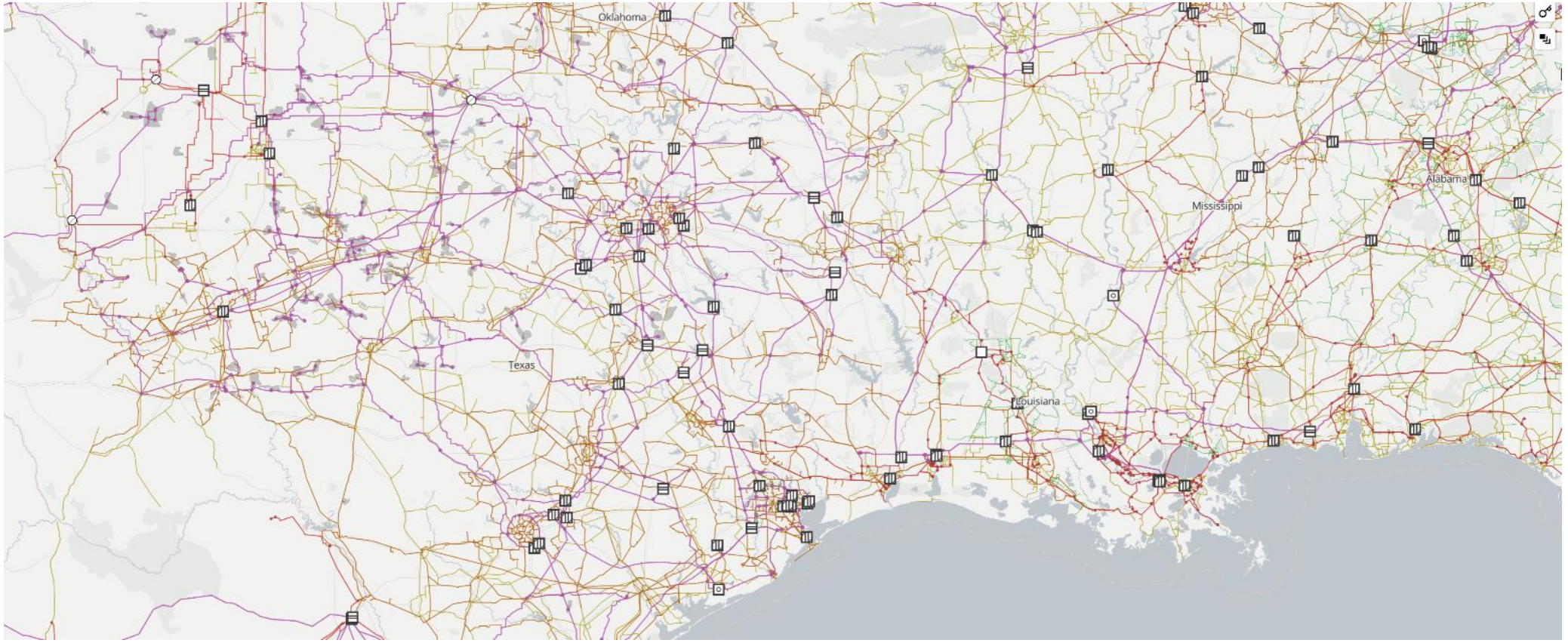

OpenInfraMap: Southeast Texas and Mexico

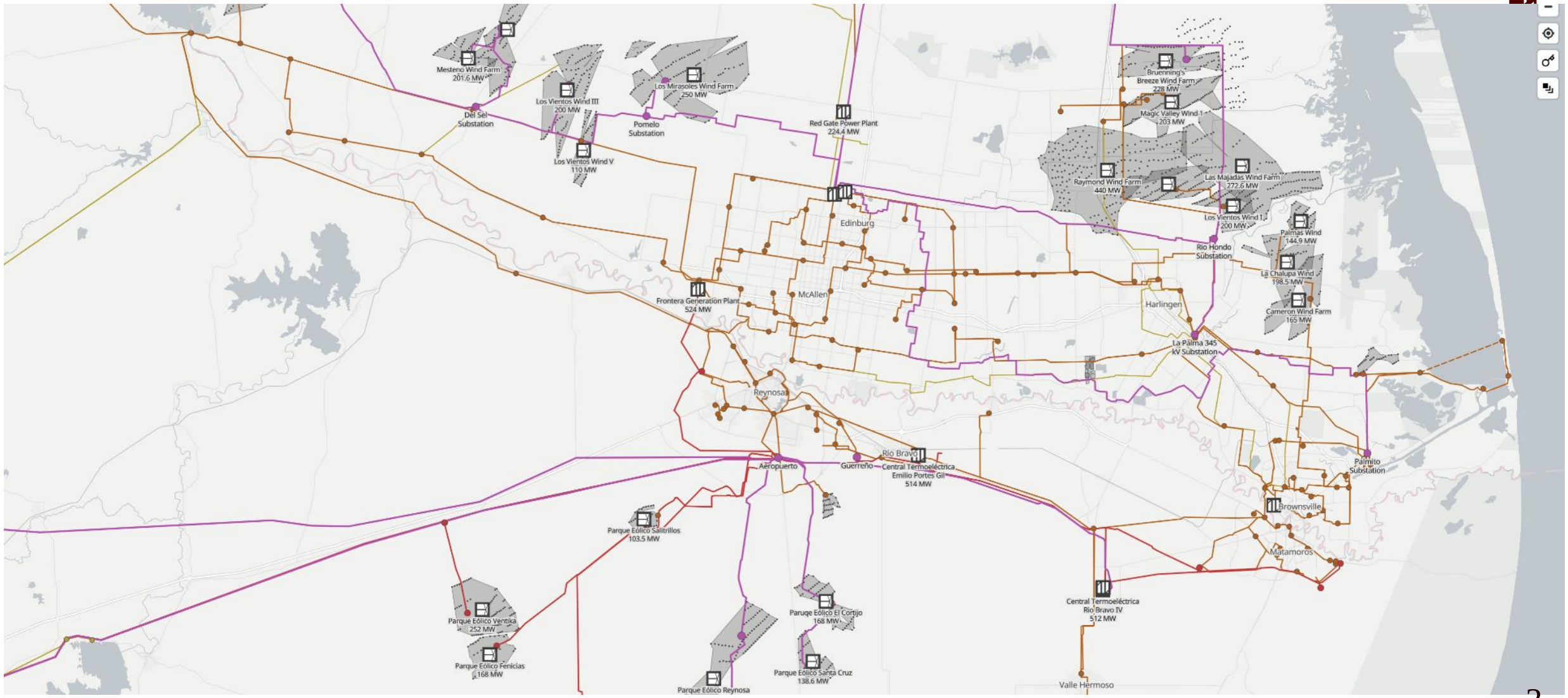

Combined North American East/West Machine Models using 2022 Series Data

- We are currently working on a project the includes looking at the stability of a combined model of the North American East and West grids
- The case has 120,000 buses and 16,000 generators
- The on the right shows the machine models used with the generators

	Model Class	Object Type	Active and Online Count	Active Count	Inactive Co
1	Machine Model	GENTPJ	2926	3759	
2	Machine Model	GENROU	2072	3254	
3	Machine Model	REGC_A	1189	1728	
4	Machine Model	GENSAL	780	1102	
5	Machine Model	GENROE	351	492	
6	Machine Model	GENTPF	295	391	
7	Machine Model	GENSAE	262	348	
8	Machine Model	WT3G2	146	186	
9	Machine Model	WT4G1	86	115	
10	Machine Model	WT3G	77	83	
11	Machine Model	WT1G1	63	67	
12	Machine Model	WT4G	43	43	
13	Machine Model	WT1G	34	39	
14	Machine Model	DER_A	29	29	
15	Machine Model	WT2G	26	33	
16	Machine Model	GENCLS	26	137	
17	Machine Model	WT2G1	21	25	
18	Machine Model	CSVGN5	21	22	
19	Machine Model	GEWTG	21	21	
20	Machine Model	MOTOR1	19	19	
21	Machine Model	CSTATT	13	17	
22	Machine Model	CSVGN1	8	8	
23	Machine Model	PVD1	5	5	
24	Machine Model	VWSCC	3	6	
25	Machine Model	CIMTR3	2	4	
26	Machine Model	WT3G1	1	1	
27	Machine Model	SVCWSC	1	1	
28	Machine Model	CSVGN4	1	1	
29	Machine Model	GENWRI	1	2	
30	Machine Model	STCON	0	1	
31	Machine Model	PV1G	0	6	
32	Machine Model	GENCC	0	24	
33	Machine Model	CSVGN3	0	2	

GENSAL

- The GENSAL model had been widely used to model salient pole synchronous generators
  - In salient pole models saturation is only assumed to affect the d-axis
  - In the 2010 WECC cases about 1/3 of machine models were GENSAL; in 2013 essentially none are, being replaced by GENTPF or GENTPJ
  - A 2014 series EI model had about 1/3 of its machines models set as GENSAL
  - In November 2016 NERC issued a recommendation to use GENTPJ rather than GENSAL for new models. See

www.nerc.com/comm/PC/NERCModelingNotifications/Use%20of%20GENTPJ%20Generator%20Model.pdf

- GENSAL is now considered obsolete, but is still a useful introduction to the subtransient models; also, as shown the Eastern Interconnect model still has more than 1000 GENSAL models

GENSAL Block Diagram

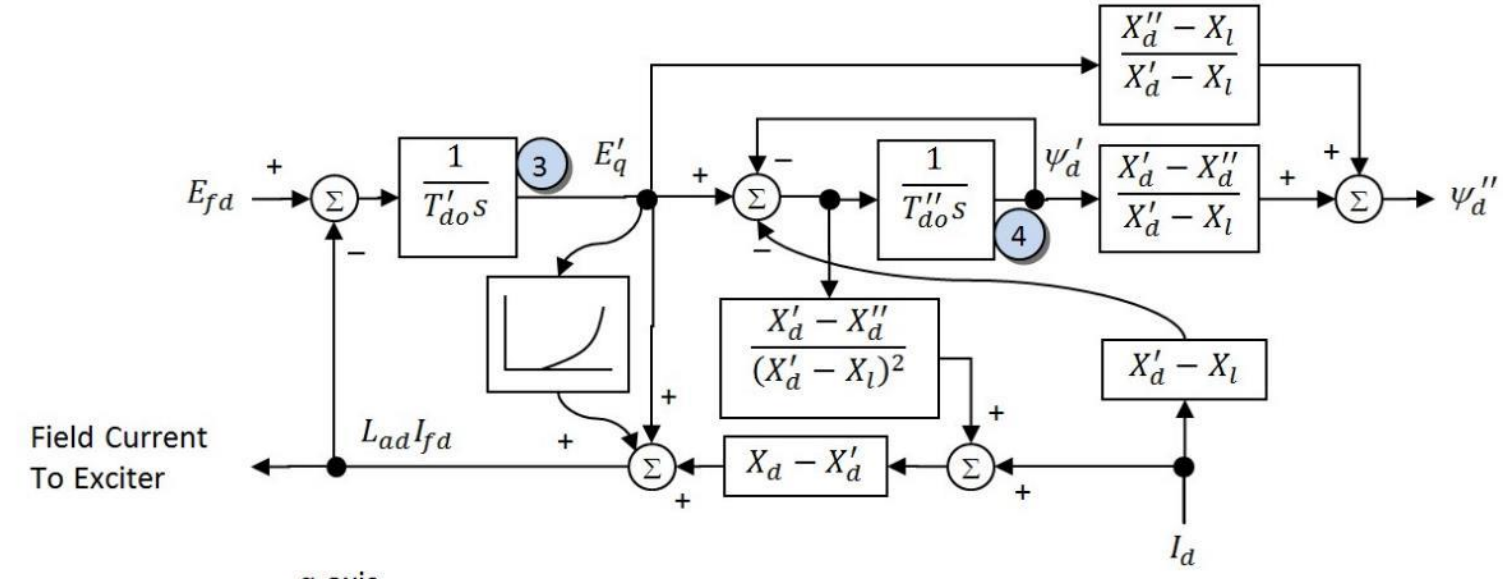

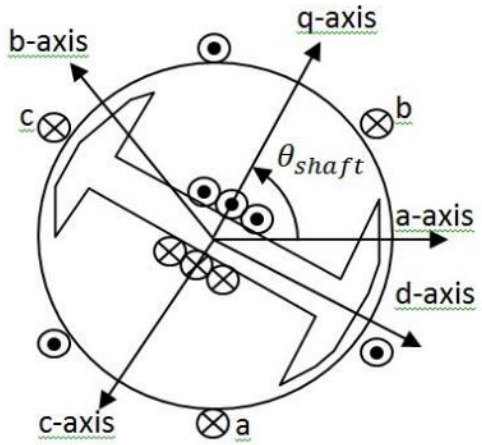

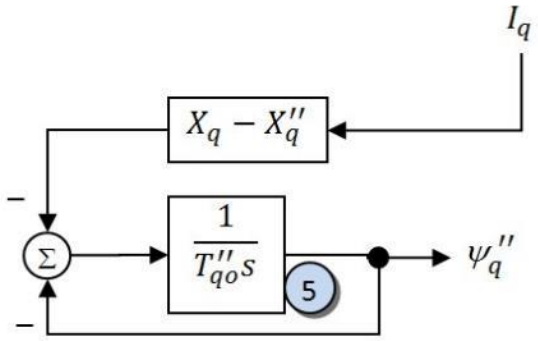

A quadratic saturation function is used; for initialization it only impacts the E_{fd} value

GENSAL Example

- Assume same system as before with same common generator parameters: H=3.0, D=0, R_a = 0, X_d = 2.1, X_q = 2.0, X'_d = 0.3, X''_d=X''_q=0.2, X_l = 0.13, T'_{do} = 7.0, T''_{do} = 0.07, T''_{qo} =0.07, S(1.0) =0, and S(1.2) = 0.
- Same terminal conditions as before
  - Current of 1.0-j0.3286 and generator terminal voltage of 1.072+j0.22 = 1.0946 ∠11.59 °
- Use same equation to get initial δ

$$|E|\angle\delta = \bar{V} + (R_s + jX_q)\bar{I}$$
$$= 1.072 + j0.22 + (0.0 + j2)(1.0 - j0.3286)$$
$$= 1.729 + j2.22 = 2.81\angle 52.1°$$

Same delta as with the other models

Saved as case **B4_GENSAL**

GENSAL Example

- Then as before

$$\begin{bmatrix} V_d \\ V_q \end{bmatrix} = \begin{bmatrix} 0.7889 & -0.6146 \\ 0.6146 & 0.7889 \end{bmatrix} \begin{bmatrix} 1.0723 \\ 0.220 \end{bmatrix} = \begin{bmatrix} 0.7107 \\ 0.8326 \end{bmatrix}$$

and

$$\begin{bmatrix} I_d \\ I_q \end{bmatrix} = \begin{bmatrix} 0.7889 & -0.6146 \\ 0.6146 & 0.7889 \end{bmatrix} \begin{bmatrix} 1.000 \\ -0.3287 \end{bmatrix} = \begin{bmatrix} 0.9909 \\ 0.3553 \end{bmatrix}$$

$$\bar{E}'' = \bar{V} + (R_s + jX'')\bar{I} = E_r'' + E_i''$$

$$= 1.072 + j0.22 + (0 + j0.2)(1.0 - j0.3286)$$

$$= 1.138 + j0.42$$

Needs to be converted to dq

GENSAL Example

- Giving the initial fluxes (with ω = 1.0) of

$$\begin{bmatrix} -\psi''_q \\ \psi''_d \end{bmatrix} = \begin{bmatrix} 0.7889 & -0.6146 \\ 0.6146 & 0.7889 \end{bmatrix} \begin{bmatrix} 1.138 \\ 0.420 \end{bmatrix} = \begin{bmatrix} 0.6396 \\ 1.031 \end{bmatrix}$$

Recall $E''_d + jE''_q = \left(-\psi''_q + j\psi''_d\right)\omega$

- To get the remaining variables set the differential equations to zero,

$$\psi''_q = -\left(X_q - X''_q\right) I_q = -(2-0.2)(0.3553) = -0.6396$$

$$E'_q = 1.1298, \quad \psi'_d = 0.9614$$

Solving the d-axis requires solving two linear equations for two unknowns

GENSAL Example

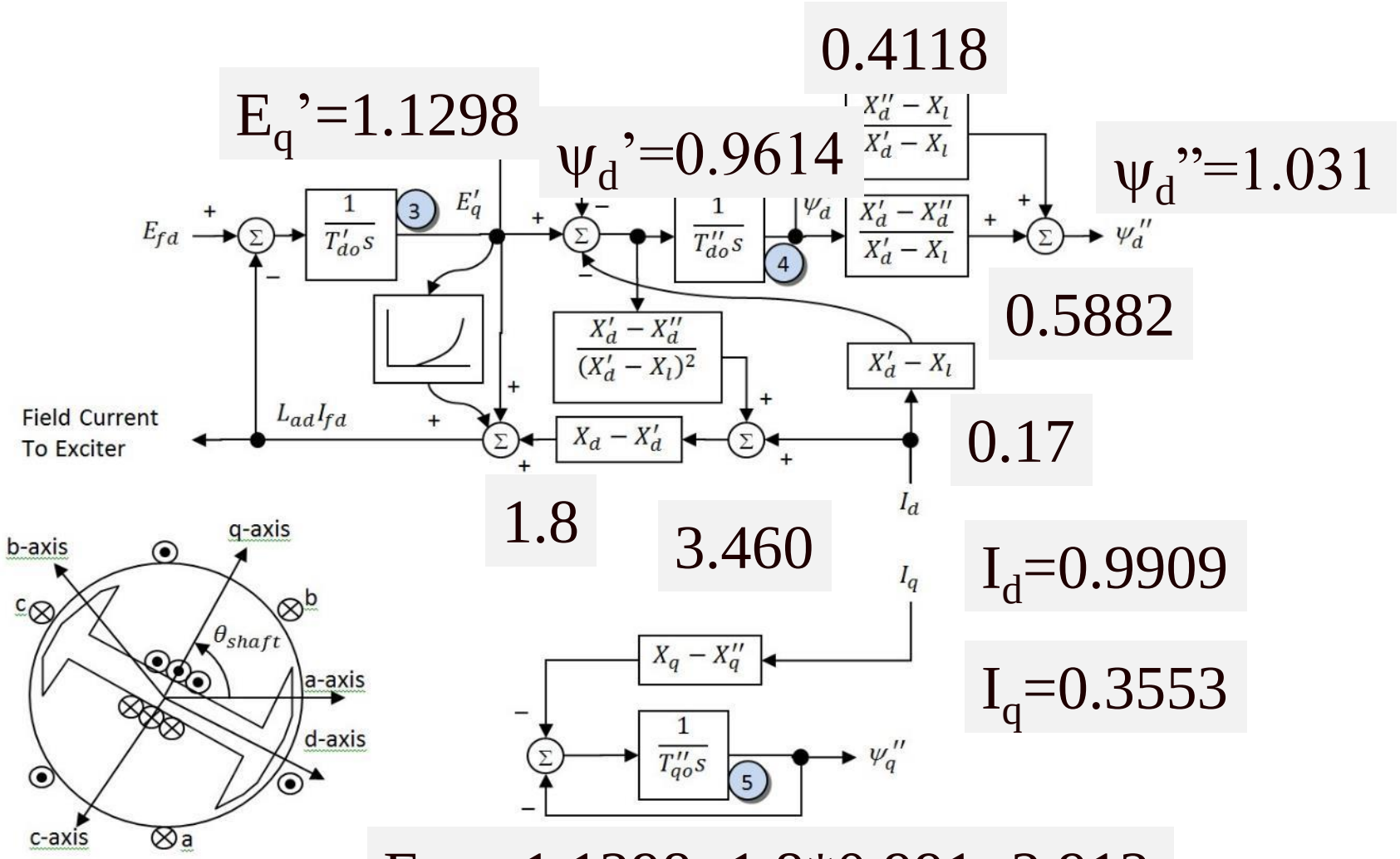

E_{fd} = 1.1298+1.8*0.991=2.912

Comparison Between Gensal and Flux Decay

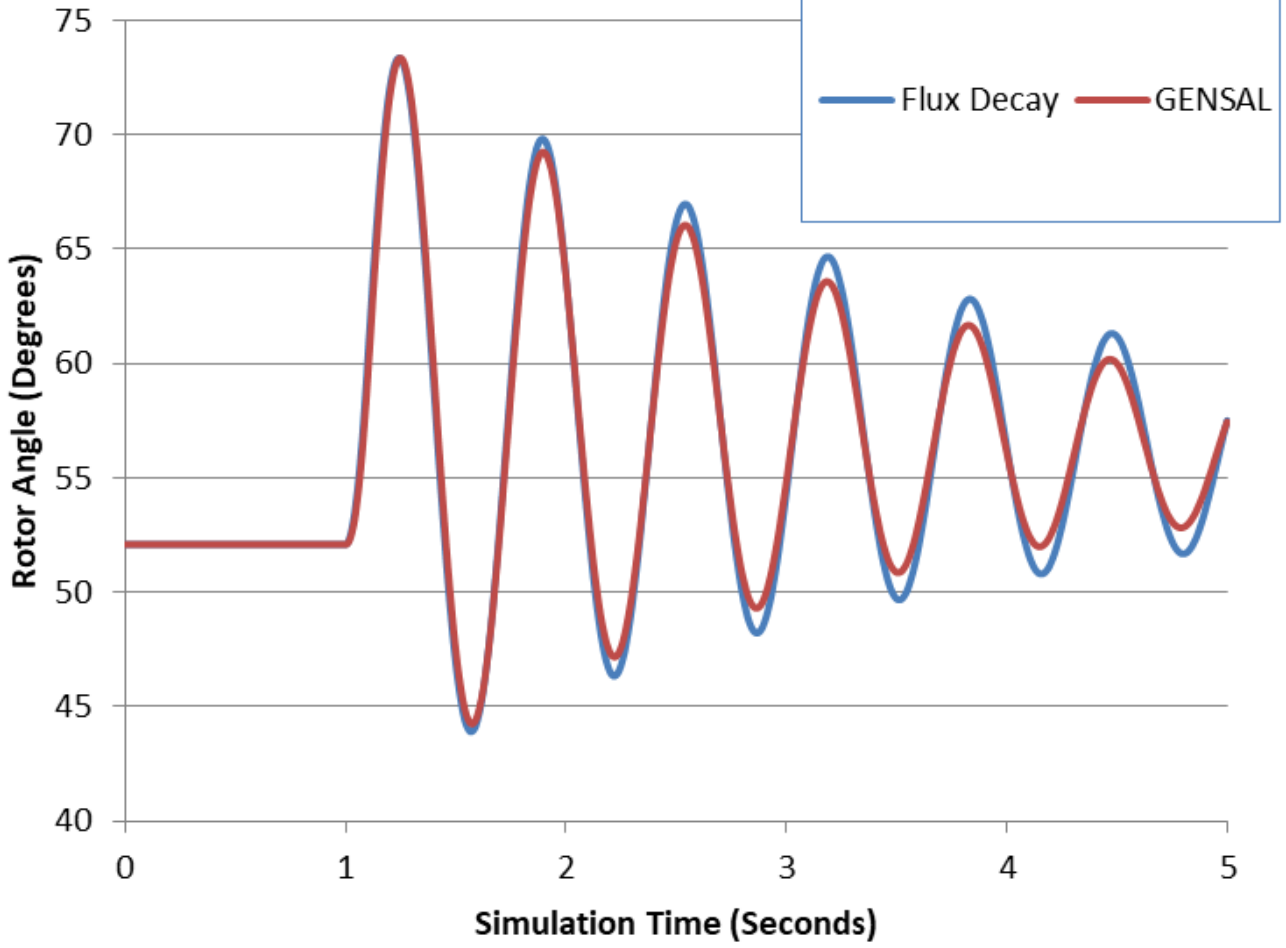

Nonlinear Magnetic Circuits

- Nonlinear magnetic models are needed because magnetic materials tend to saturate; that is, increasingly large amounts of current are needed to increase the flux density

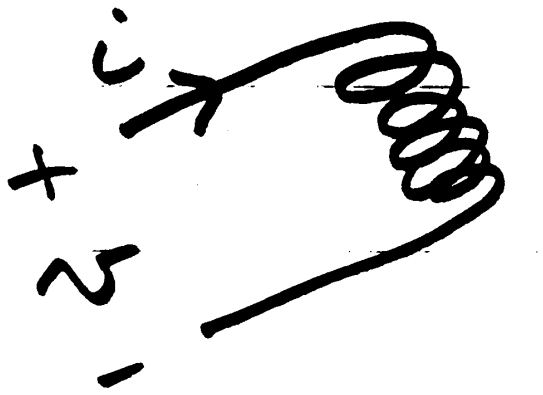

$$R = 0$$

$$v = \frac{d\lambda}{dt} = N\frac{d\phi}{dt}$$

When linear $\lambda = Li$

Saturation

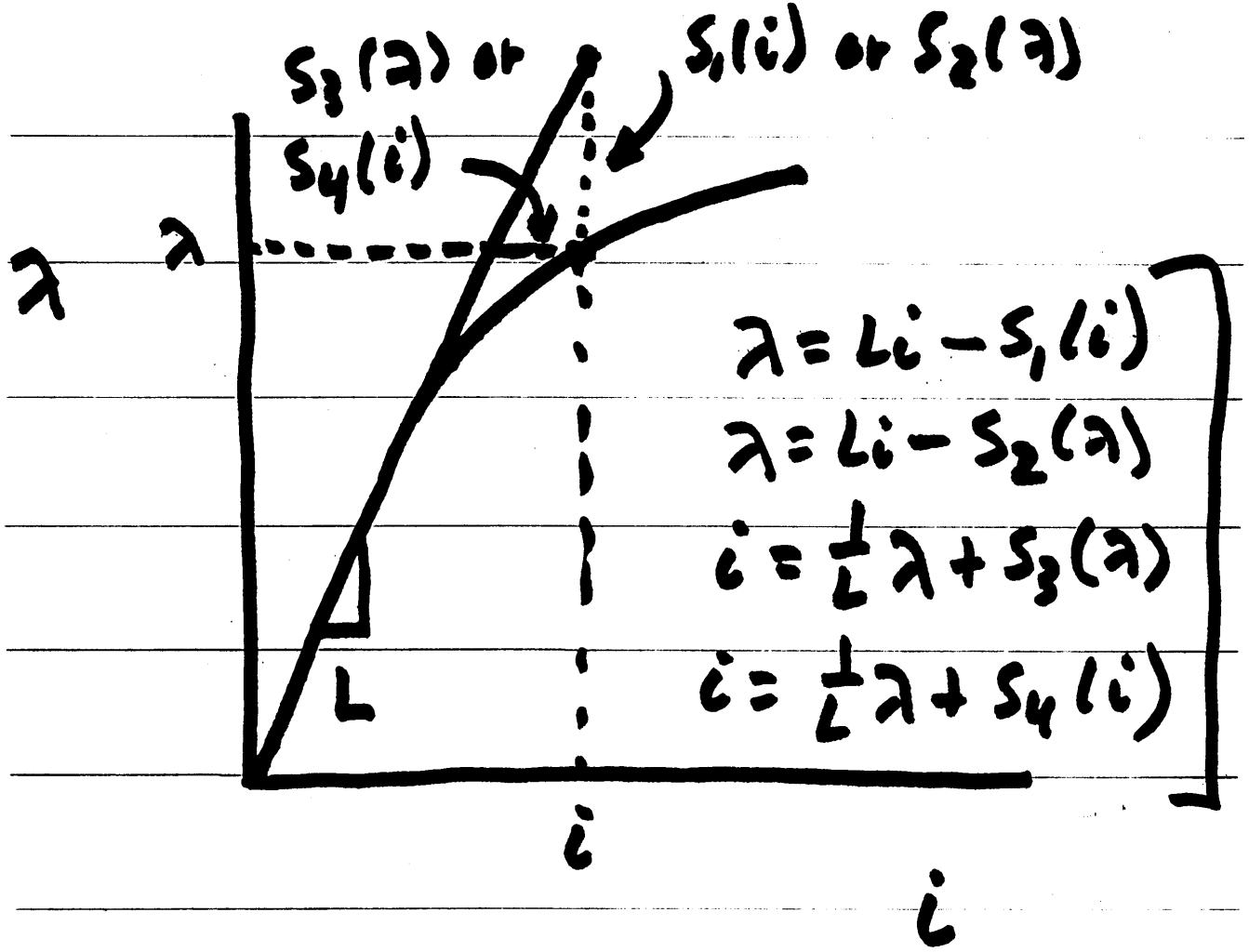
$s_3(\lambda)$ or
$s_4(i)$
$s_1(i)$ or $s_2(\lambda)$
λ
λ
L
$\lambda = Li - s_1(i)$
$\lambda = Li - s_2(\lambda)$
$i = \frac{1}{L}\lambda + s_3(\lambda)$
$i = \frac{1}{L}\lambda + s_4(i)$
i
i

Relative Magnetic Strength Levels

- Earth's magnetic field is between 30 and 70 μT (0.3 to 0.7 gauss)
- A refrigerator magnet might have 0.005 T
- A commercial neodymium magnet might be 1 T
- A magnetic resonance imaging (MRI) machine would be between 1 and 3 T
- Strong lab magnets can be 10 T
- Frogs can be levitated at 16 T

  www.ru.nl/hfml/research/levitation/diamagnetic-levitation/
- A neutron star can have 1 to 100 MT!

Magnetic Saturation and Hysteresis

- The below image shows the saturation curves for various materials

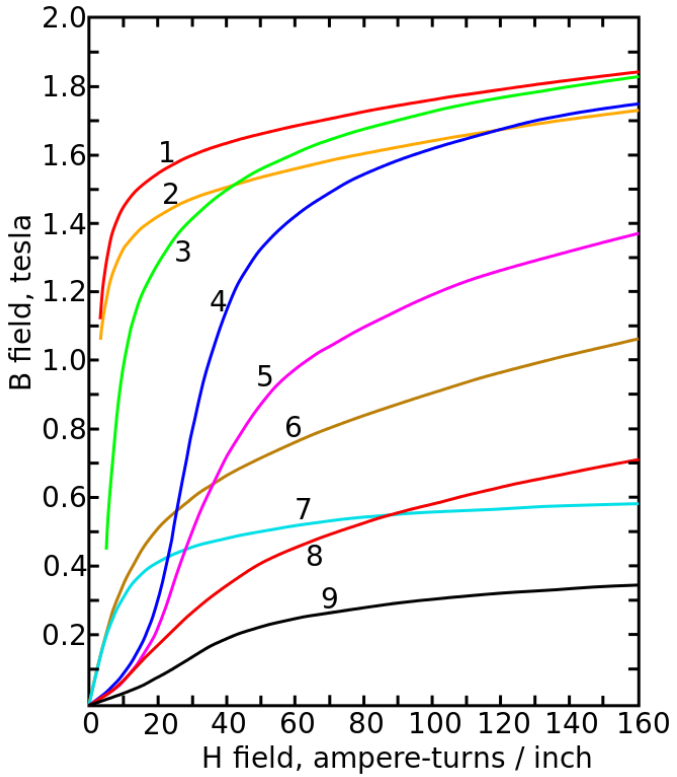

Magnetization curves of nine ferromagnetic materials, showing saturation. 1.Sheet steel, 2.Silicon steel, 3.Cast steel, 4.Tungsten steel, 5.Magnet steel, 6.Cast iron, 7.Nickel, 8.Cobalt, 9.Magnetite; highest saturation materials can get to around 2.2 or 2.3T

H is proportional to current

Image Source: en.wikipedia.org/wiki/Saturation_(magnetic)

Magnetic Saturation and Hysteresis

- Magnetic materials also exhibit hysteresis, so there is some residual magnetism when the current goes to zero; design goal is to reduce the area enclosed by the hysteresis loop

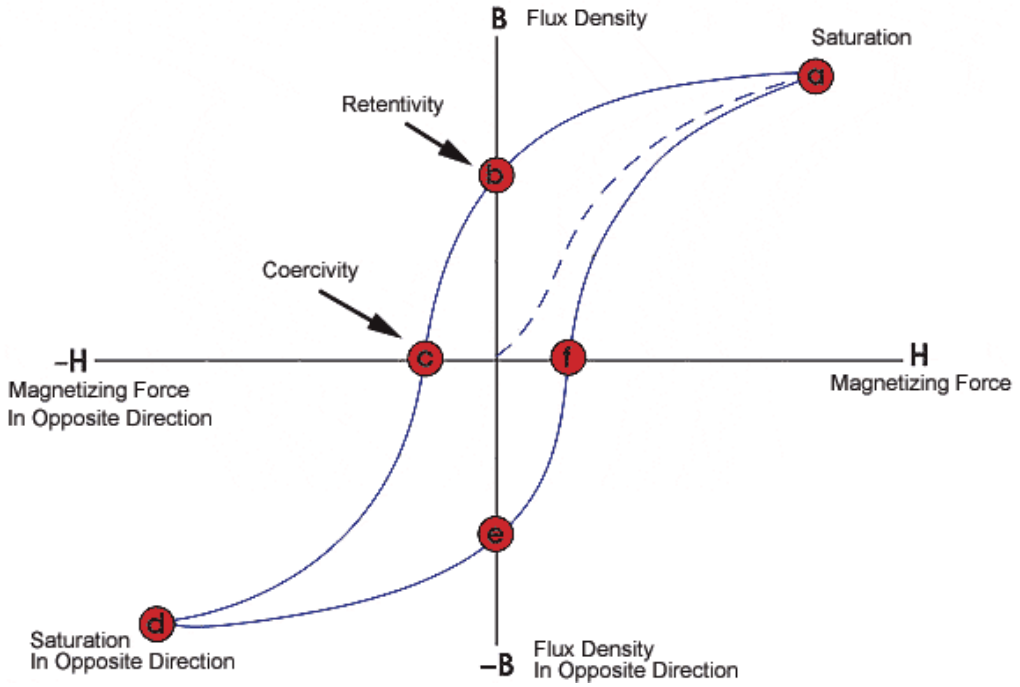

To minimize the amount of magnetic material, and hence cost and weight, electric machines are designed to operate close to saturation

Image source: www.nde-ed.org/EducationResources/CommunityCollege/MagParticle/Graphics/BHCurve.gif

Saturation Models

- Many different models exist to represent saturation
  - There is a tradeoff between accuracy and complexity
- One simple approach is to replace

$$\frac{dE_q^{'}}{dt} = \frac{1}{T_{do}^{'}}\left(-E_q^{'} - (X_d - X_d^{'})I_d + E_{fd}\right)$$

- with

$$\frac{dE_q^{'}}{dt} = \frac{1}{T_{do}^{'}}\left(-E_q^{'} - (X_d - X_d^{'})I_d - Se(E_q^{'}) + E_{fd}\right)$$

Saturation Models

- In steady-state this becomes

$$E_{fd} = E_q^{'} + (X_d - X_d^{'})I_d + Se(E_q^{'})$$

- Hence saturation increases the required E_{fd} to get a desired flux
- Saturation is usually modeled using a quadratic function, with the value of Se specified at two points (often at 1.0 flux and 1.2 flux)

$$Se = B(E_q' - A)^2$$

An alternative model is $Se = \dfrac{B(E_q' - A)^2}{E_q'}$

A and B are determined from two provided data points

Saturation Example

- If Se = 0.1 when the flux is 1.0 and 0.5 when the flux is 1.2, what are the values of A and B using the $Se = B(E_q^{'} - A)^2$

To solve use the Se(1.2) value to eliminate B

$$B = \frac{Se(1.2)}{(1.2 - A)^2} \rightarrow Se(1.0) = \frac{Se(1.2)}{(1.2 - A)^2}(1.0 - A)^2$$

$$(1.2 - A)^2 Se(1.0) = Se(1.2)(1.0 - A)^2$$

With the values we get

$$4A^2 - 7.6A + 3.56 = 0 \rightarrow A = 0.838 \text{ or } 1.0618$$

Use A=0.838, which gives B=3.820

Saturation Example: Selection of A

When selecting which of the two values of A to use, we do not want the minimum to be between the two specified values. That is Se(1.0) and Se(1.2).

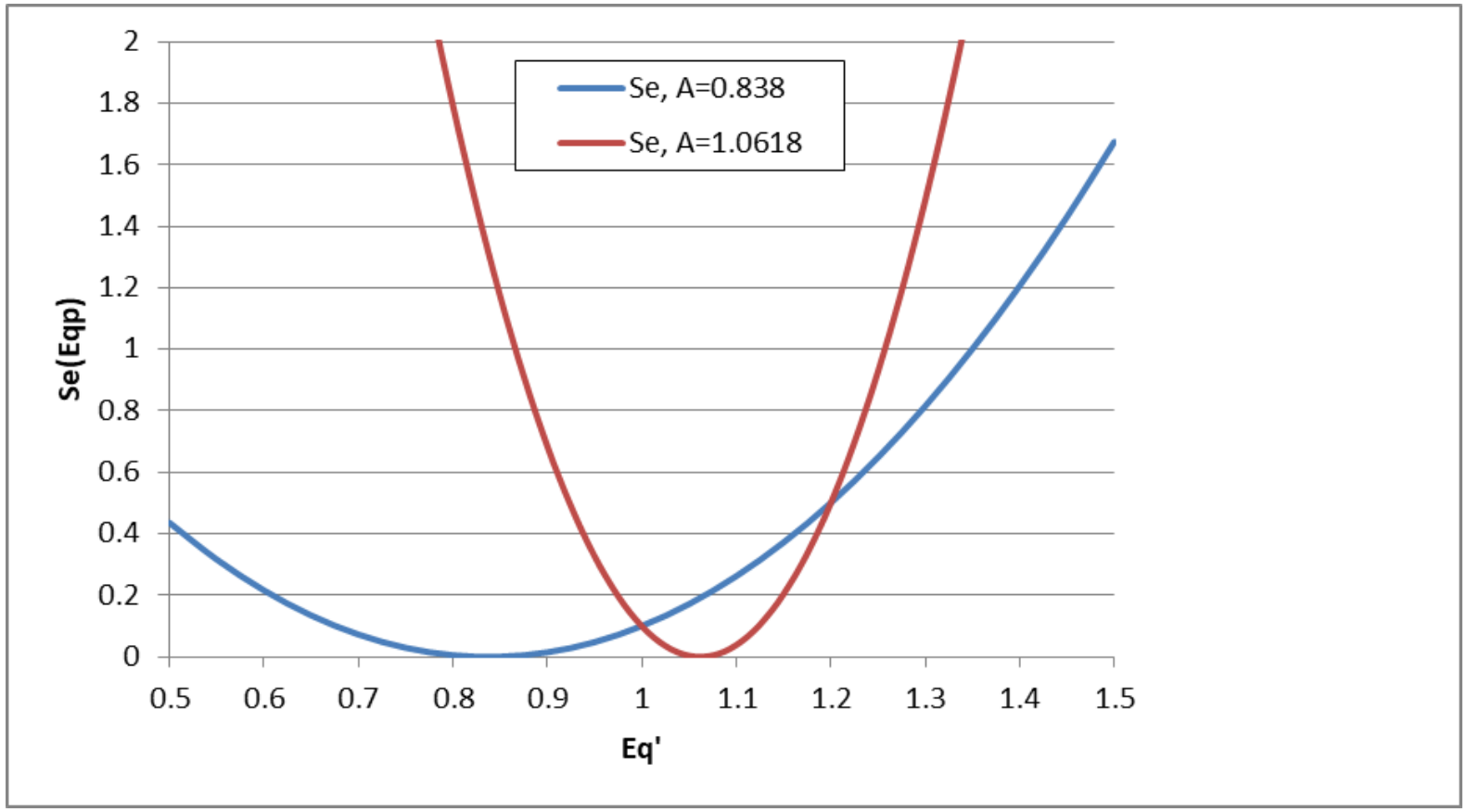

Implementing Saturation Models

- When implementing saturation models in code, it is important to recognize that the function is meant to be positive, so negative values are not allowed
- In large cases one is almost guaranteed to have special cases, sometimes caused by user typos
  - What to do if Se(1.2) < Se(1.0)?
  - What to do if Se(1.0) = 0 and Se(1.2) <> 0
  - What to do if Se(1.0) = Se(1.2) <> 0
- Exponential saturation models have also been used

GENSAL Example with Saturation

- Once E'_q has been determined, the initial field current (and hence field voltage) are easily determined by recognizing in steady-state the E'_q is zero

$$E_{fd} = E'_q\left(1+Sat(E'_q)\right)+\left(X_d - X'_d\right)I_D$$

$$=1.1298\left(1+B\left(1.1298-A\right)^2\right)+\left(2.1-0.3\right)(0.9909)$$

$$=1.1298\left(1+3.82\left(1.1298-0.838\right)^2\right)+1.784=3.28$$

Saturation coefficients were determined from the two initial values

Saved as case **B4_GENSAL_SAT**

Modeled GENSAL Saturation Values

- Almost all the GENSAL generators have saturation values; data is sorted by the S12 value

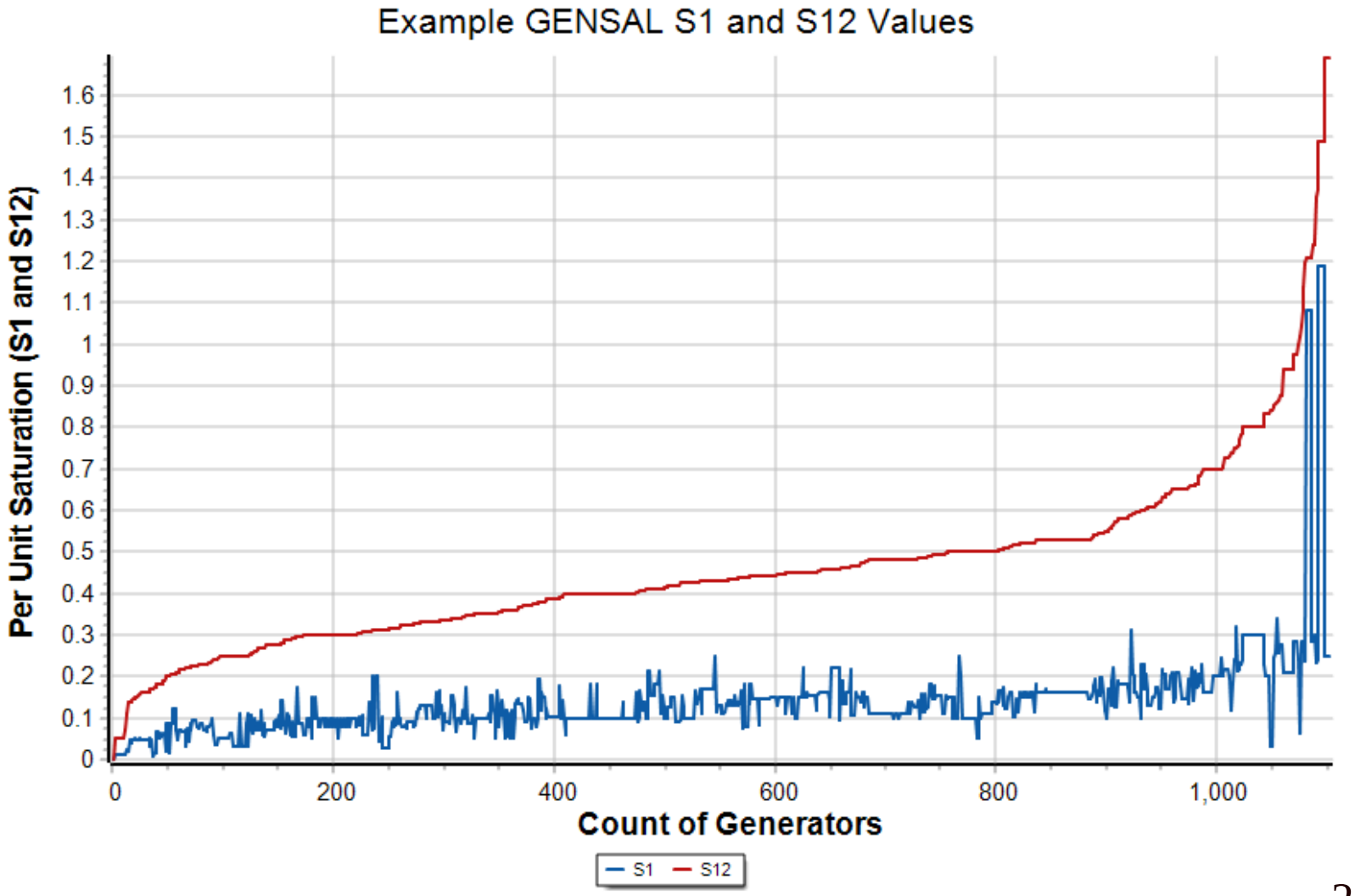

GENROU

- The GENROU model has been widely used to model round rotor machines
- Saturation is assumed to occur on both the d-axis and the q-axis, making initialization slightly more difficult

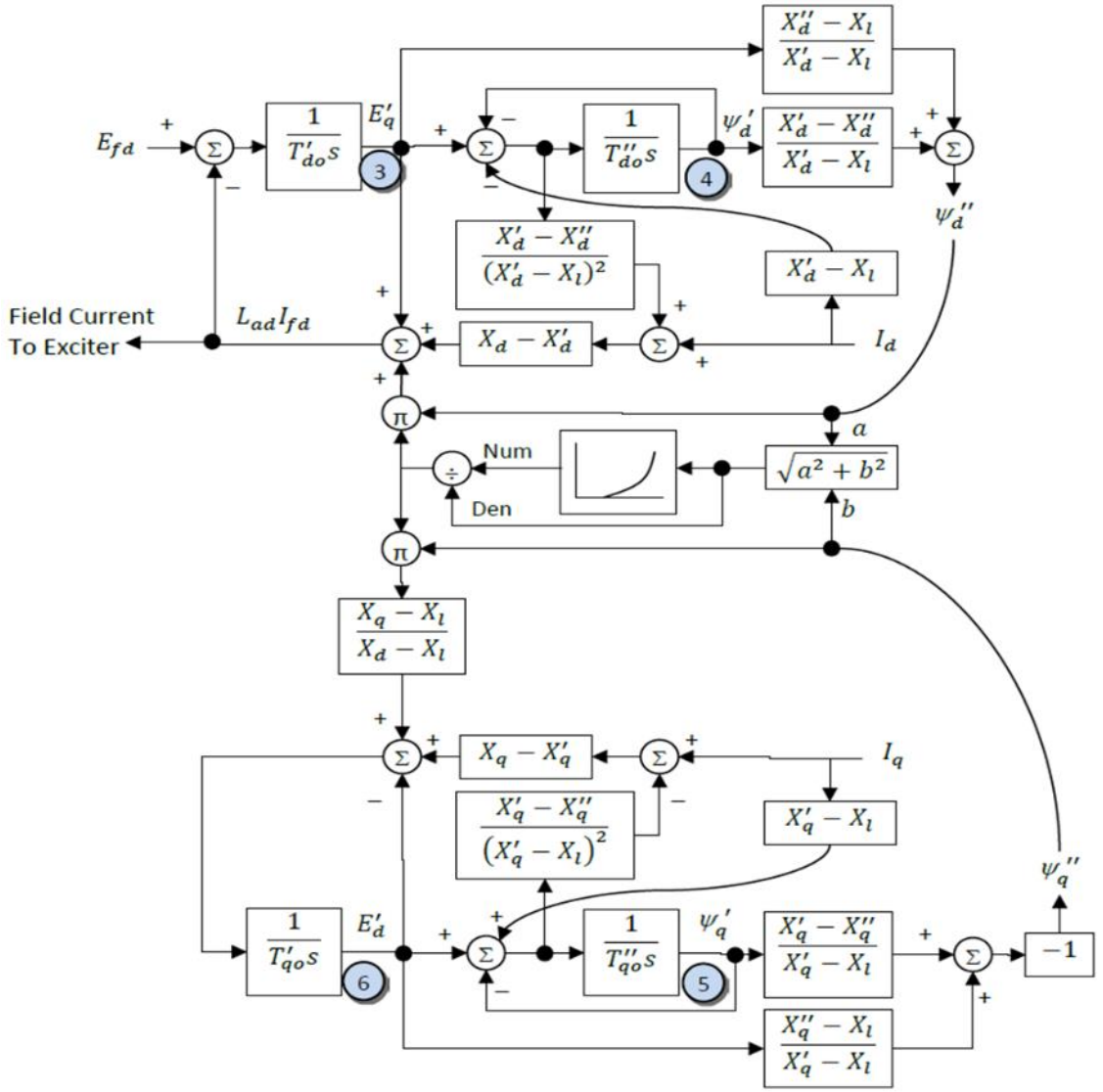

The d-axis is similar to that of the GENSAL; the q-axis is now similar to the d-axis. Note that saturation now affects both axes.

GENROU Initialization

- Because saturation impacts both axes, the simple approach will no longer work
- Key insight for determining initial δ is that the magnitude of the saturation depends upon the magnitude of ψ'', which is independent of δ

$$\left|\psi''\right| = \left|\bar{V} + (R_s + jX'')\bar{I}\right|$$

This point is crucial!

- Solving for δ requires an iterative approach; first get a guess of δ using the unsaturated approach

$$\left|E\right|\angle\delta = \bar{V} + \left(R_s + jX_q\right)\bar{I}$$

GENROU Initialization

- Then solve five nonlinear equations for five unknowns
  - The five unknowns are δ, E'_q, E'_d, ψ'_q, and ψ'_d
- Five equations come from the terminal power flow constraints (which allow us to define $\boldsymbol{\psi_d}$" and $\boldsymbol{\psi_q}$" as a function of the power flow voltage, current and δ) and from the differential equations initially set to zero
  - The $\boldsymbol{\psi_d}$" and $\boldsymbol{\psi_q}$" block diagram constraints
  - Two differential equations for the q-axis, one for the d-axis (the other equation is used to set the field voltage
- Values can be determined using Newton's method, which is needed for the nonlinear case with saturation

GENROU Initialization

- Use dq transform to express terminal current as

$$\begin{bmatrix} I_d \\ I_q \end{bmatrix} = \begin{bmatrix} \sin\delta & -\cos\delta \\ \cos\delta & \sin\delta \end{bmatrix} \begin{bmatrix} I_r \\ I_i \end{bmatrix}$$

These values will change during the iteration as δ changes

- Get expressions for ψ''_q and ψ''_d in terms of the initial terminal voltage and δ
  - Use dq transform to express terminal voltage as

$$\begin{bmatrix} V_d \\ V_q \end{bmatrix} = \begin{bmatrix} \sin\delta & -\cos\delta \\ \cos\delta & \sin\delta \end{bmatrix} \begin{bmatrix} V_r \\ V_i \end{bmatrix}$$

Recall Xd"=Xq"=X" and ω=1 (in steady-state)

  - Then from $-\psi''_q + j\psi''_d = \left(V_d + jV_q\right) + (R_s + jX'')\left(I_d + jI_q\right)$

$$-\psi''_q = V_d + R_s I_d - X''I_q$$

$$\psi''_d = V_q + R_s I_a + X''I_d$$

Expressing complex equation as two real equations

GENROU Initialization Example

- Extend the two-axis example
  - For two-axis assume H = 3.0 per unit-seconds, R_s=0, X_d = 2.1, X_q = 2.0, X'_d= 0.3, X'_q = 0.5, T'_{do} = 7.0, T'_{qo} = 0.75 per unit using the 100 MVA base.
  - For subtransient fields assume X''_d=X''_q=0.28, X_l = 0.13, T''_{do} = 0.073, T''_{qo} =0.07
  - for comparison we'll initially assume no saturation
- From two-axis get a guess of δ

$$\bar{E} = 1.0946\angle 11.59° + (j2.0)(1.052\angle -18.2°) = 2.814\angle 52.1°$$

$$\rightarrow \delta = 52.1°$$

Saved as case **B4_GENROU_NoSat**

GENROU Initialization Example

- And the network current and voltage in dq reference

$$\begin{bmatrix} V_d \\ V_q \end{bmatrix} = \begin{bmatrix} 0.7889 & -0.6146 \\ 0.6146 & 0.7889 \end{bmatrix} \begin{bmatrix} 1.0723 \\ 0.220 \end{bmatrix} = \begin{bmatrix} 0.7107 \\ 0.8326 \end{bmatrix}$$

$$\begin{bmatrix} I_d \\ I_q \end{bmatrix} = \begin{bmatrix} 0.7889 & -0.6146 \\ 0.6146 & 0.7889 \end{bmatrix} \begin{bmatrix} 1.000 \\ -0.3287 \end{bmatrix} = \begin{bmatrix} 0.9909 \\ 0.3553 \end{bmatrix}$$

- Which gives initial subtransient fluxes (with R_s=0),

$$\left(-\psi_q'' + j\psi_d''\right)\omega = \left(V_d + jV_q\right) + (R_s + jX'')\left(I_d + jI_q\right)$$

$$-\psi_q''\,\omega = V_d + R_s I_d - X'' I_q = 0.7107 - 0.28 \times 0.3553 = 0.611$$

$$\psi_d''\,\omega = V_q + R_s I_a + X'' I_d = 0.8326 + 0.28 \times 0.9909 = 1.110$$

GENROU Initialization Example

- Without saturation this is the exact solution

  Initial values are:
  δ = 52.1⍰,
  E'_q=1.1298,
  E'_d=0.533,
  ψ'_q =0.6645,
  and ψ'_d=0.9614

  E_{fd}=2.9133

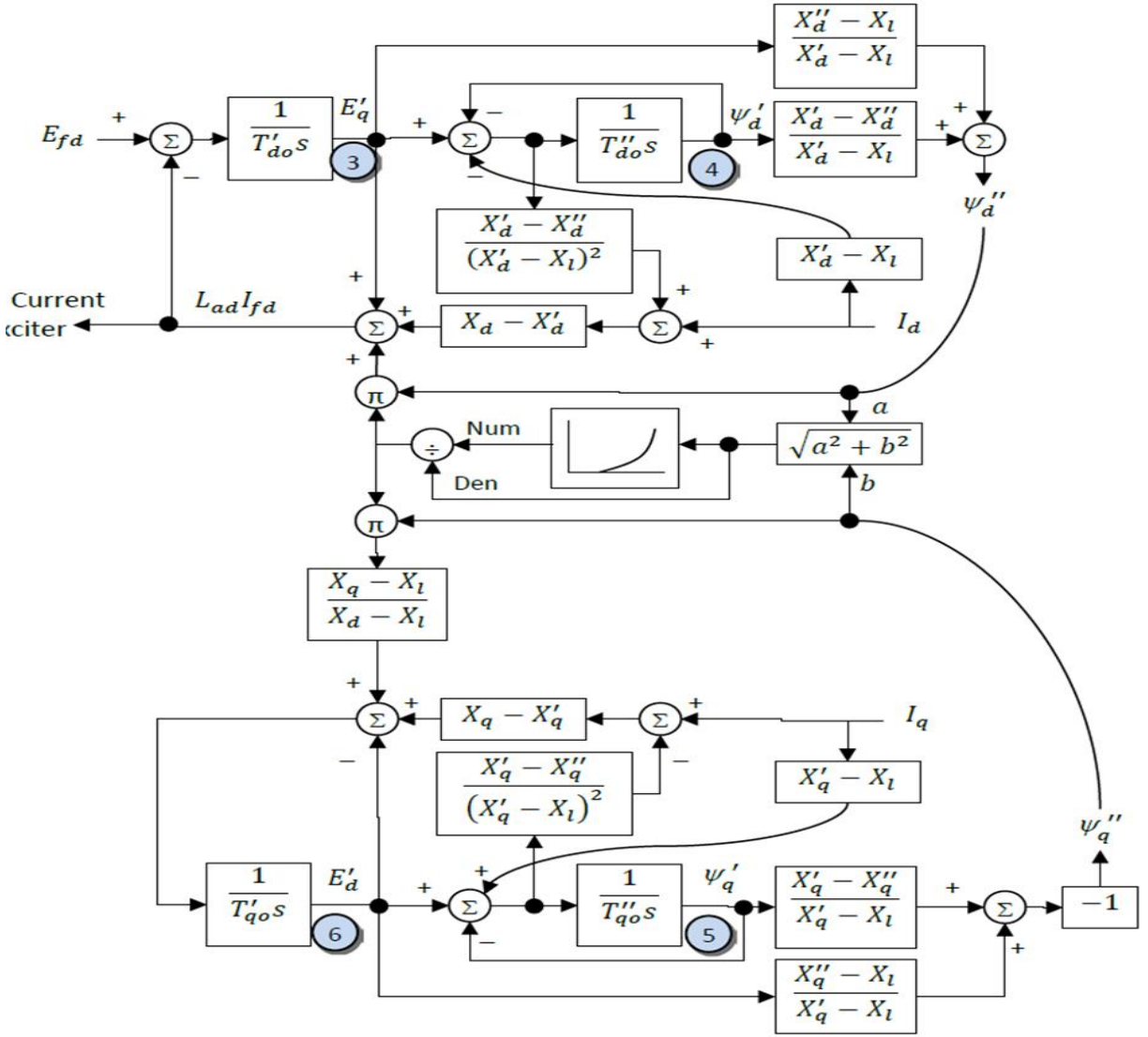

Two-Axis versus GENROU Response

Figure compares rotor angle for bus 3 fault, cleared after 0.1 seconds

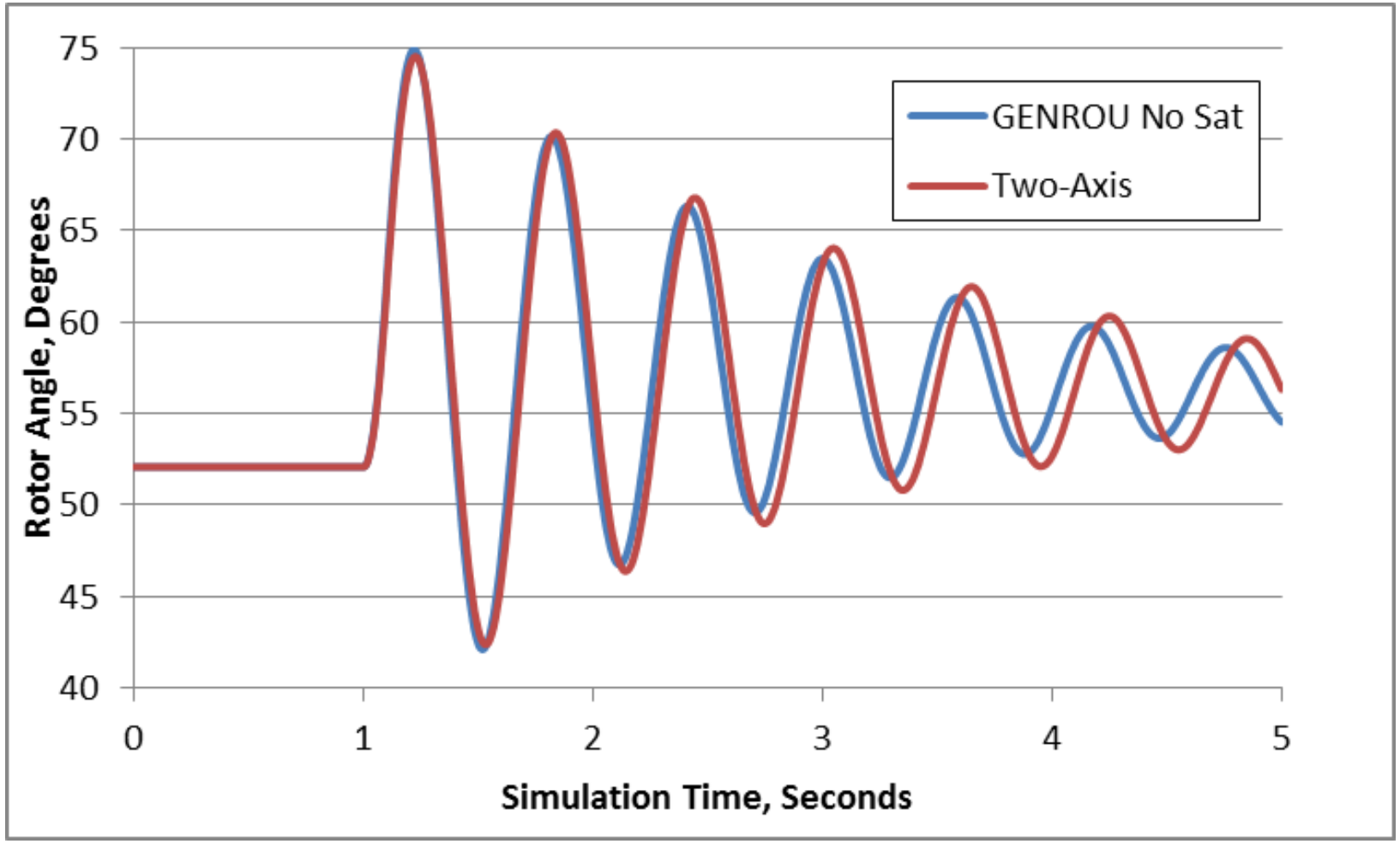

GENROU with Saturation

- Nonlinear approach is needed in common situation in which there is saturation
- Assume previous GENROU model with S(1.0) = 0.05, and S(1.2) = 0.2.
- Initial values are: δ = 49.2□, E'_q=1.1591, E'_d=0.4646, ψ'_q=0.6146, and ψ'_d=0.9940, Efd=3.2186

Same fault as before

Saved as case **B4_GENROU_Sat**

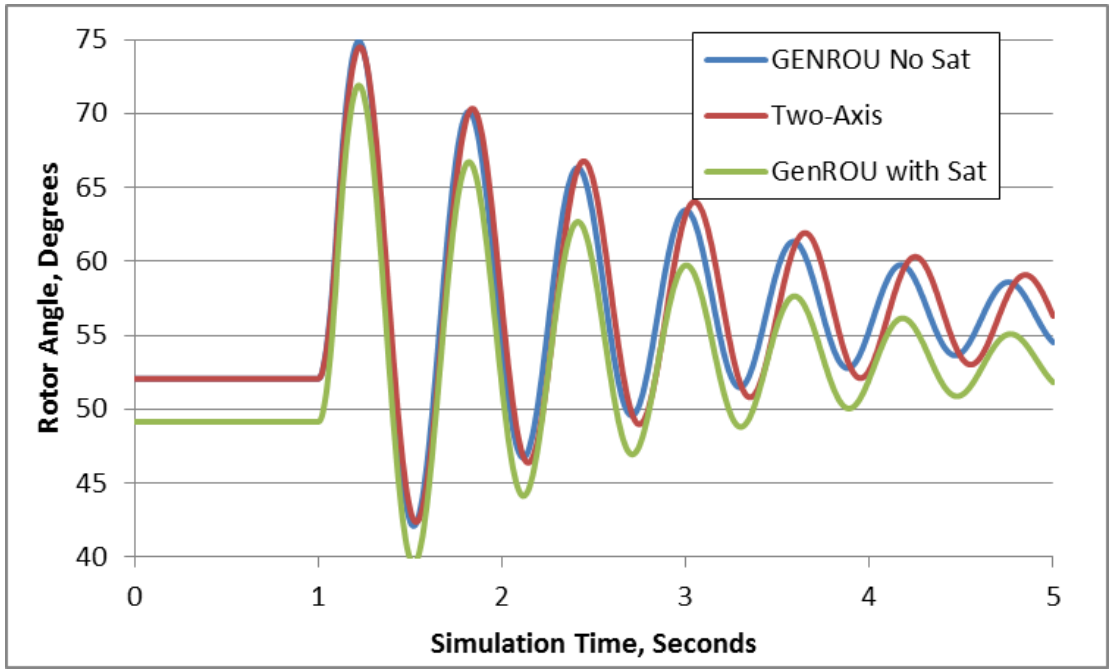

GENTPF and GENTPJ Models

- These models were introduced in 2009 to provide a better match between simulated and actual system results for salient pole machines
  - Desire was to duplicate functionality from old BPA TS code
  - Allows for subtransient saliency ($X"_d <> X"_q$)
  - Can also be used with round rotor, replacing GENSAL and GENROU
- Useful references are available at below the below links; includes all the equations, and saturation details

  www.nerc.com/comm/PC/NERCModelingNotifications/Use%20of%20GENTPJ%20Generator%20Model.pdf

  https://www.powerworld.com/knowledge-base/derivation-of-the-gentpjgentpf-model-from-the-genrougensal

Motivation for the Change: GENSAL Actual Results

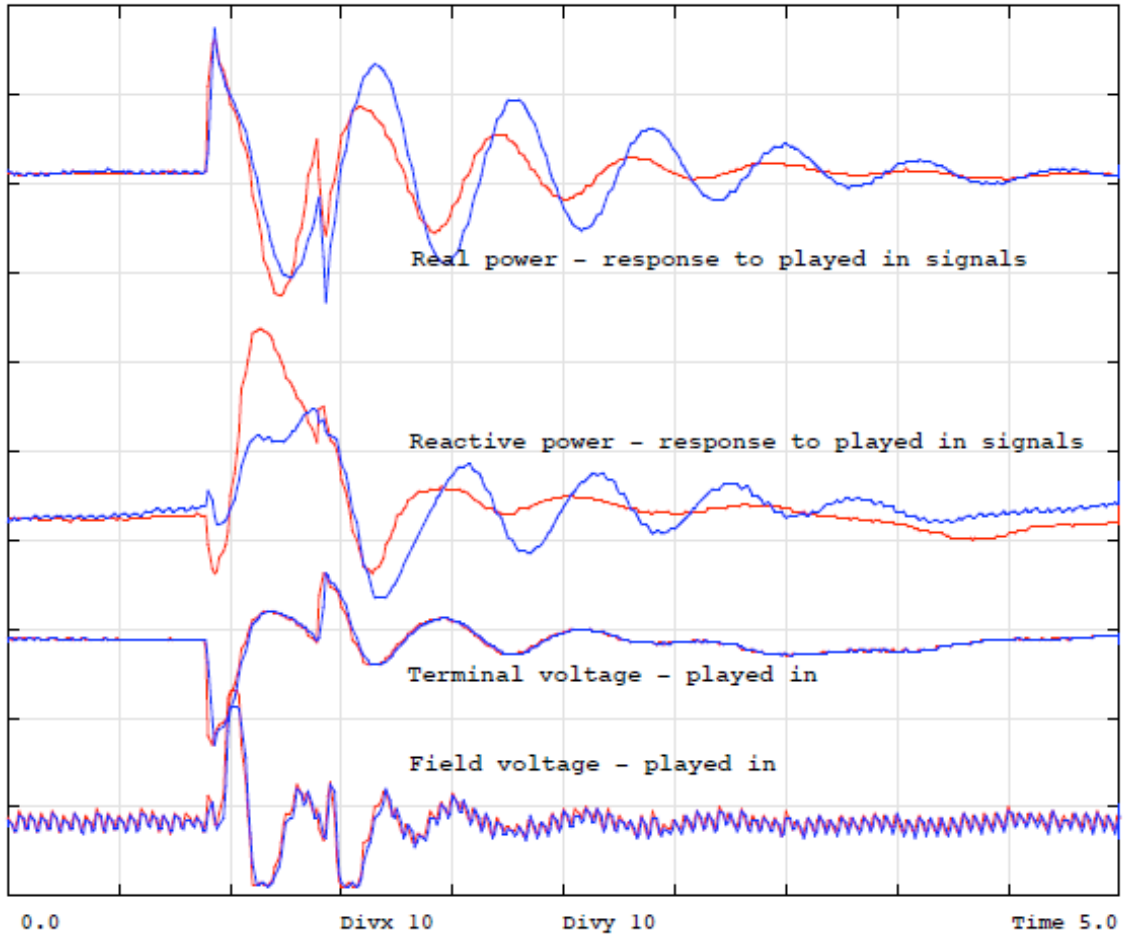

Chief Joseph disturbance playback

GENSAL BLUE = MODEL

RED = ACTUAL

(Chief Joseph is a 2620 MW hydro plant on the Columbia River in Washington)

Image source :https://www.wecc.biz/library/WECC%20Documents/Documents%20for%20Generators/Generator%20Testing%20Program/gentpj%20and%20gensal%20morel.pdf

GENTPJ Results

Chief Joseph disturbance playback

GENTPJ

BLUE = MODEL

RED = ACTUAL

GENTPF and GENTPJ Models

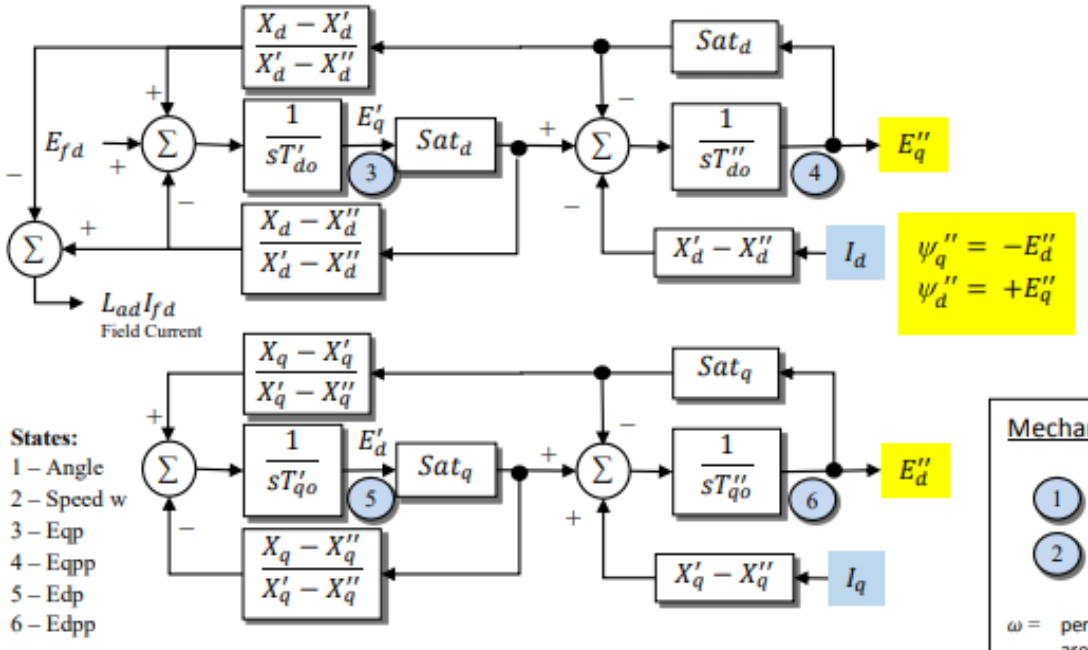

$\psi''_q = -E''_d$
$\psi''_d = +E''_q$

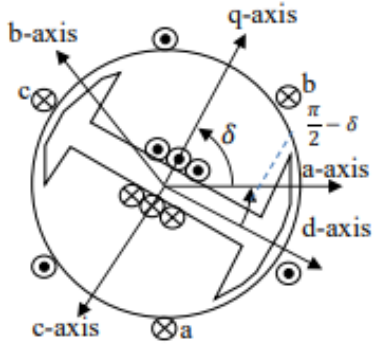

$$\psi_{ag} = \sqrt{(V_{qterm} + I_q R_a + I_d X_l)^2 + (V_{dterm} + I_d R_a - I_q X_l)^2}$$

D-Axis: $Sat_d = 1 + SaturationFunction\left(\psi_{ag} + K_{is}\sqrt{I_d^2 + I_q^2}\right)$

Q-Axis: $Sat_q = 1 + \frac{X_q}{X_d} SaturationFunction\left(\psi_{ag} + K_{is}\sqrt{I_d^2 + I_q^2}\right)$

Mechanical Swing Equations

1. $\dot{\delta} = \omega * \omega_0$
2. $\dot{\omega} = \frac{1}{2H}\left(\frac{P_{mech} - D\omega}{1 + \omega} - T_{elec}\right)$

ω = per unit speed deviation, so $\omega = 0$ means we are at synchronous speed and $\omega = 1$ would mean it's spinning at double synchronous speed

ω_0 = synchronous speed $2\pi f_0$ where f_0 is the nominal system frequency in Hz

Note: If option *Ignore Speed Effects in Generator Swing Equation* is true, then instead use

$$\dot{\omega} = \frac{1}{2H}(P_{mech} - D\omega - T_{elec})$$

Most of WECC machine models are now GENTPF or GENTPJ

If nonzero, Kis typically ranges from 0.02 to 0.12

Theoretical Justification for GENTPF and GENTPJ

- In the GENROU and GENSAL models saturation shows up purely as an additive term of E_q' and E_d'
  - Saturation does not come into play in the network interface equations and thus with the assumption of X_q"=X_d" a simple circuit model can be used
- The advantage of the GENTPF/J models is saturation really affects the entire model, and in this model it is applied to all the inductance terms simultaneously
  - This complicates the network boundary equations, but since these models are designed for X_q"≠ X_d" there is no increase in complexity

GENROU/GENTPJ Comparison

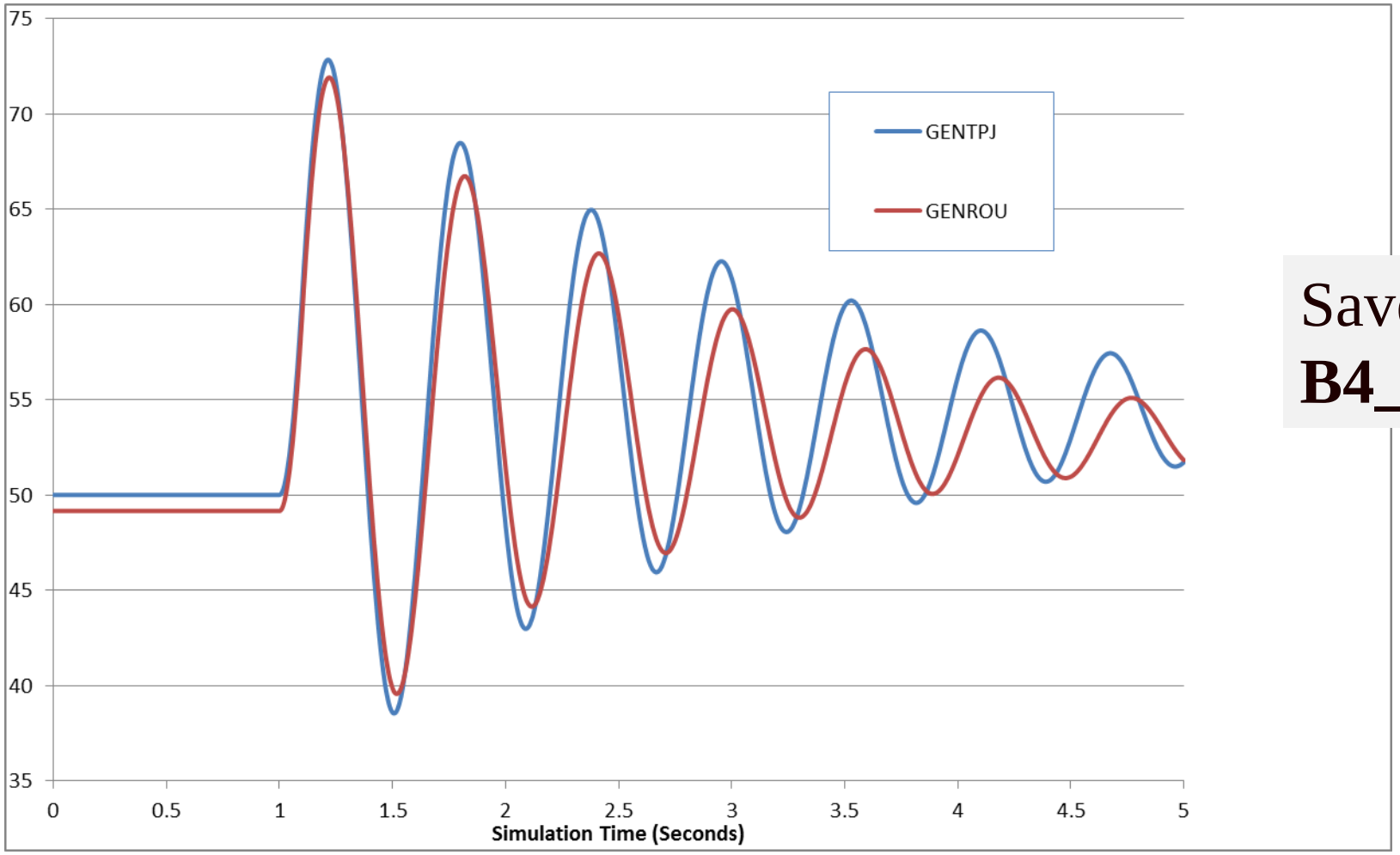

Saved as case
B4_GENTPJ_Sat

GENROU, GenTPF, GenTPJ

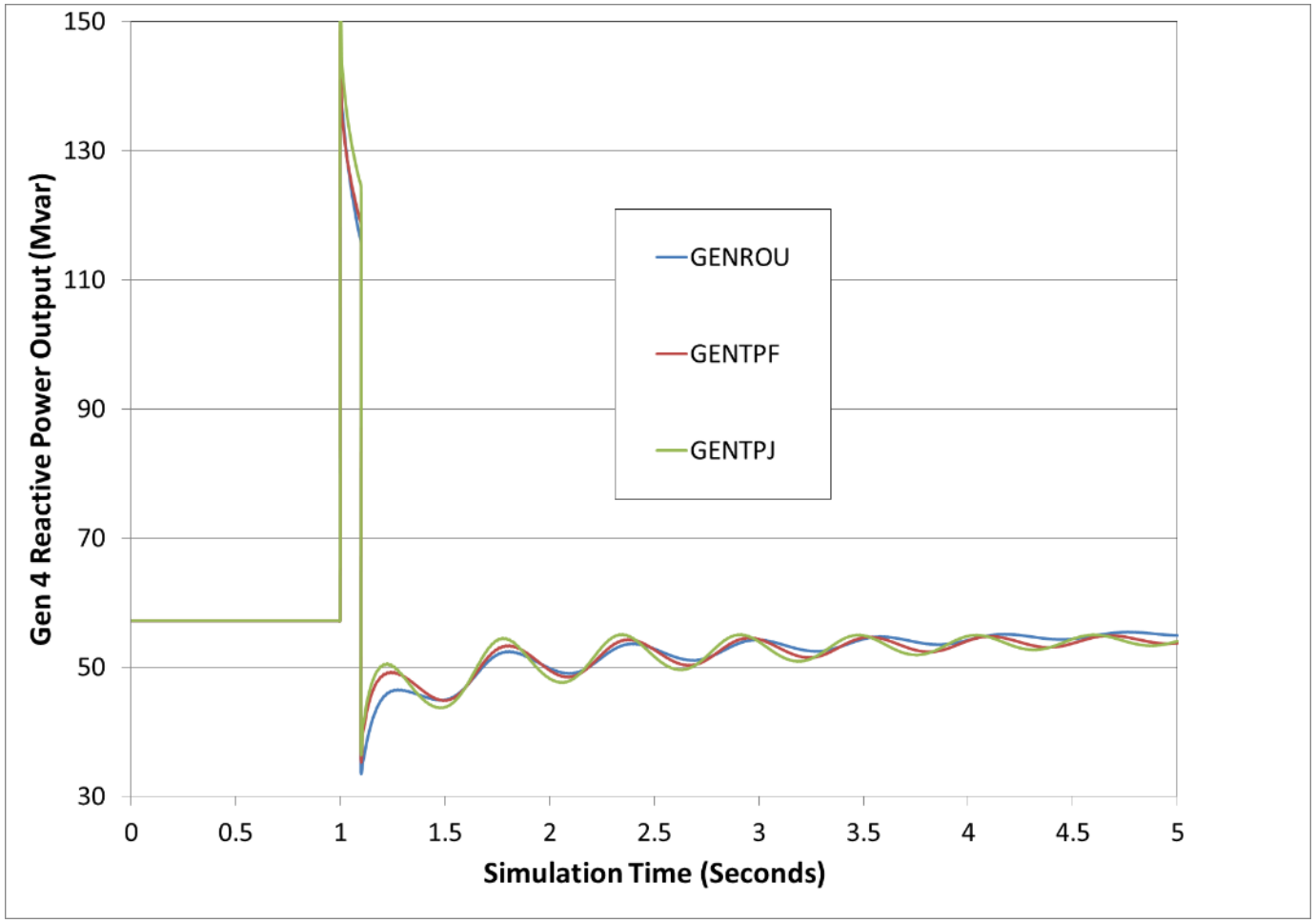

The figure compares the gen 4 reactive power output for the 0.1 second fault

Why does this even matter?

- GENROU and GENSAL models date from 1970, and their purpose was to replicate the dynamic response the synchronous machine
  - They have done a great job doing that
- Weaknesses of the GENROU and GENSAL model has been found to be with matching the field current and field voltage measurements
  - Field Voltage/Current may have been off a little bit, but that didn't effect *dynamic* response
  - It just *shifted* the values and gave them an offset
- Shifted/Offset field voltage/current didn't matter too much in the past

GENTPW, GENQEC

- However, time moves on and actually WECC is now in the process of retiring the GENTPJ and replacing it with the GENQEC
  - www.wecc.org/Reliability/Retirement%20Plan%20for%20GENTPJ.pdf
  - www.wecc.org/Administrative/GENTPJ%20Model%20Discussion.pdf
- New models are under development that address several issues
  - Saturation function should be applied to all input parameters by multiplication
    - This also ensures a conservative coupling field assumption of Peter W. Sauer paper from 1992
  - Same multiplication should be applied to both d-axis and q-axis terms (assume same amount of saturation on both)
- Results in differential equations that are nearly the same as GENROU
  - Scales the inputs and outputs, and effects time constants
- Network Interface Equation is same as GENTPF/J

GENTPW and GENQEC Basic Diagram

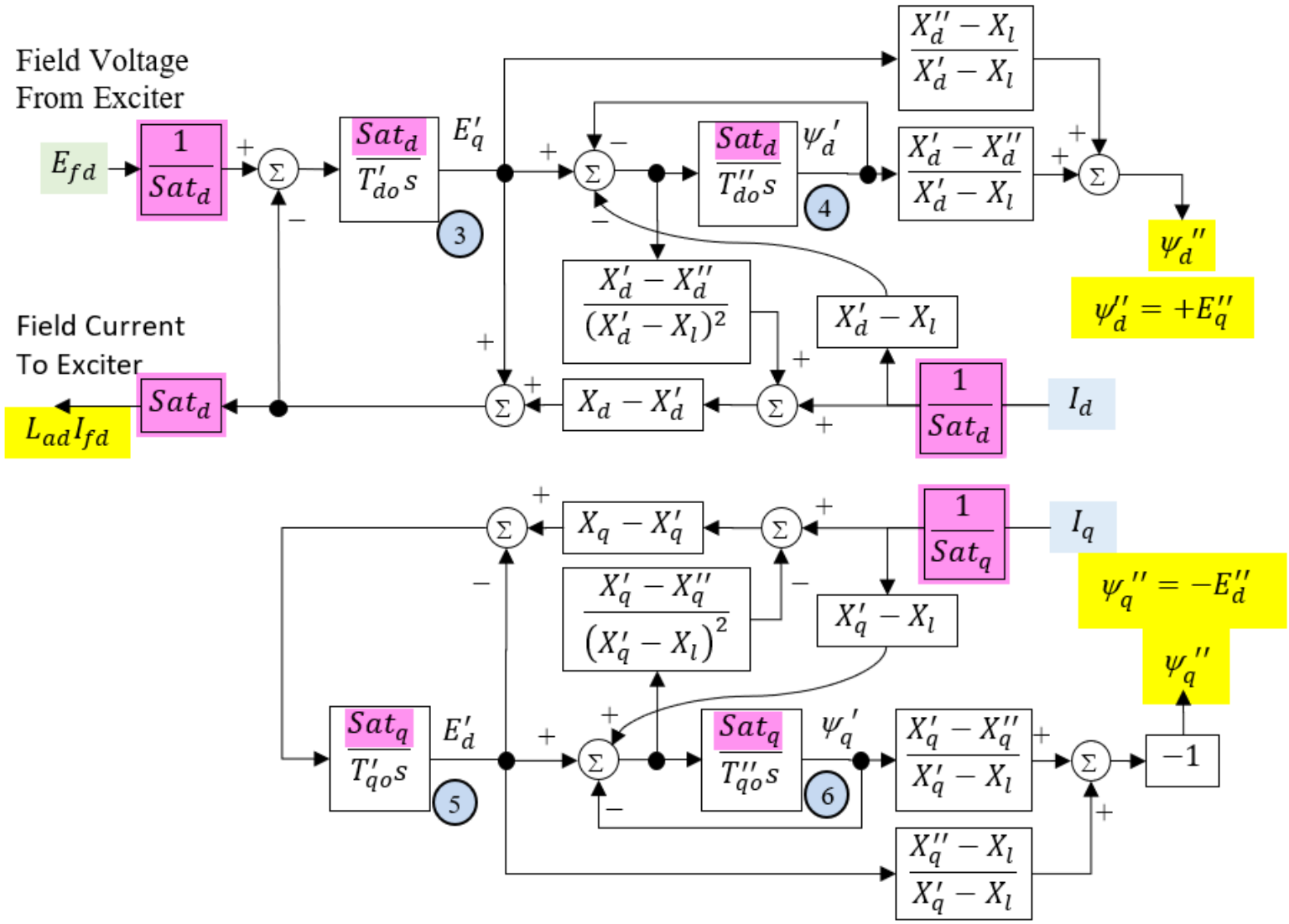

GENQEC Specification

- If you are interested in seeing the GENQEC specification (the latest is Revision 3 from 11/20), it is available at the below link

  www.wecc.org/Reliability/GENQEC%20Model%20Specification%20-%20R3.pdf

- The slides from a May 2022 WECC workshop are available at

  www.wecc.org/Administrative/GENQEC%20Model%20Workshop.pdf

The GENQEC is implemented in PowerWorld

Comment about all Synchronous Machine Models

- The models are improving. However, this does not mean the old models were useless
- All these models have the same input parameter names, but that does not mean they are exactly the same
  - Input parameters are tuned for a particular model
  - It is NOT appropriate to take the all the parameters for GENROU and just copy them over to a GENTPJ or GENQEC model and call that your new model
  - When performing a new generator testing study, that is the time to update the parameters

Dynamic Models in the Physical Structure: Exciters

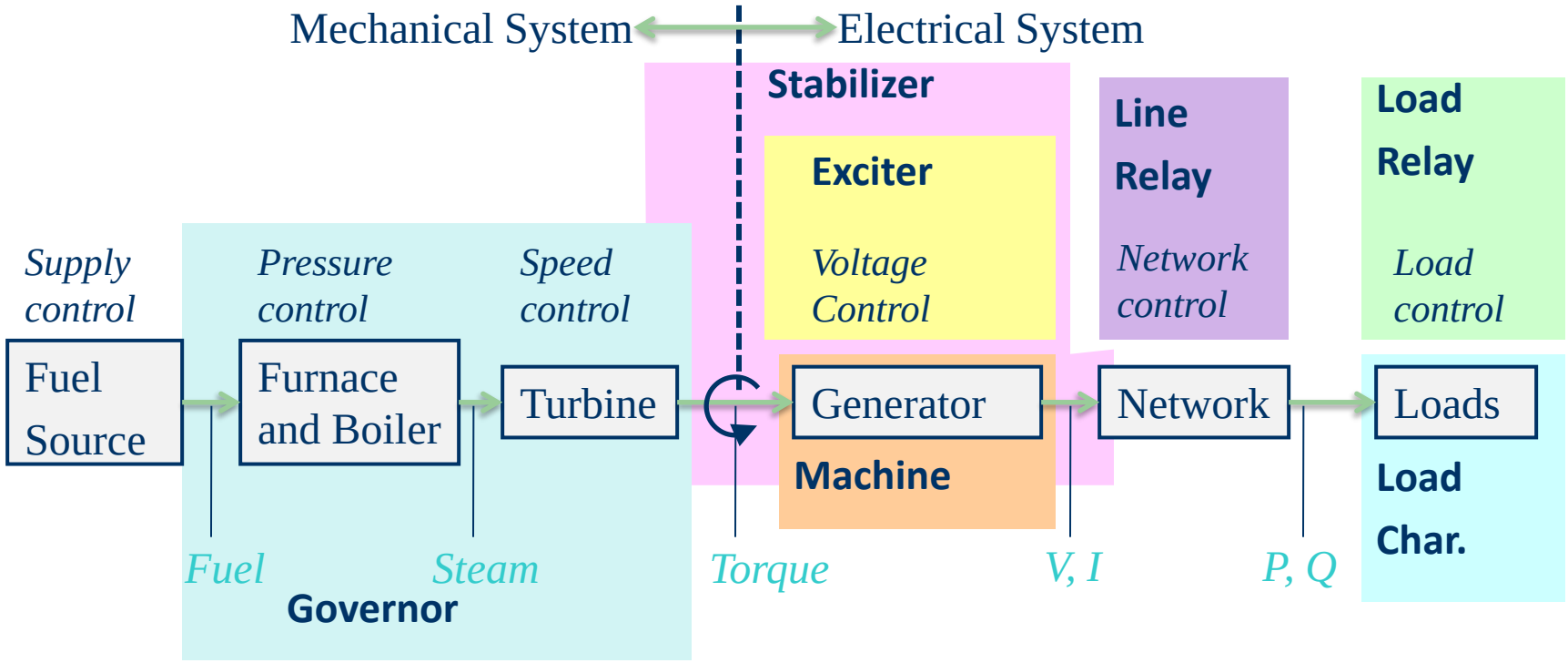

P. Sauer and M. Pai, *Power System Dynamics and Stability*, Stipes Publishing, 2006.

Exciter Models

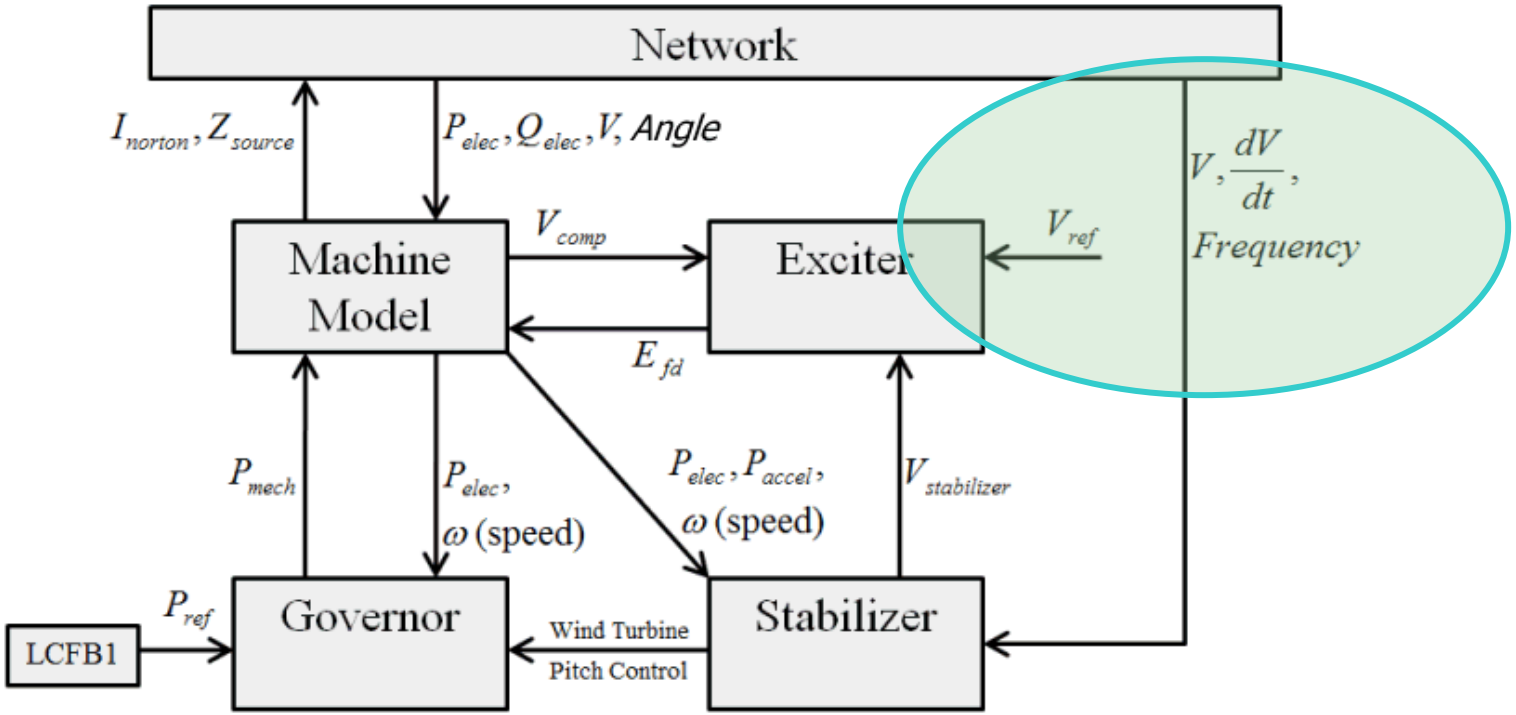

P_{elec} = Electrical Power

Q_{elec} = Electrical Reactive Power

V = Voltage at Terminal Bus

$\frac{dV}{dt}$ = Derivate of Voltage

V_{comp} = Compensated Voltage

P_{mech} = Mechanical Power

ω(speed) = Rotor Speed (often it's deviation from nominal speed)

P_{accel} = Accelerating Power

$V_{stabilizer}$ = Output of Stabilizer

V_{ref} = Exciter Control Setpoint (determined during initialization)

P_{ref} = Governor Control Setpoint (determined during initialization)

Exciters, Including AVR

- Exciters are used to control the synchronous machine field voltage and current
  - Usually modeled with automatic voltage regulator included
- A useful reference is IEEE Std 421.5-2016
  - Updated from the 2005 edition
  - Covers the major types of exciters used in transient stability
  - Continuation of standard designs started with "Computer Representation of Excitation Systems," *IEEE Trans. Power App. and Syst.*, vol. pas-87, pp. 1460-1464, June 1968
- Another reference is P. Kundur, *Power System Stability and Control*, EPRI, McGraw-Hill, 1994
  - Exciters are covered in Chapter 8 as are block diagram basics

Functional Block Diagram

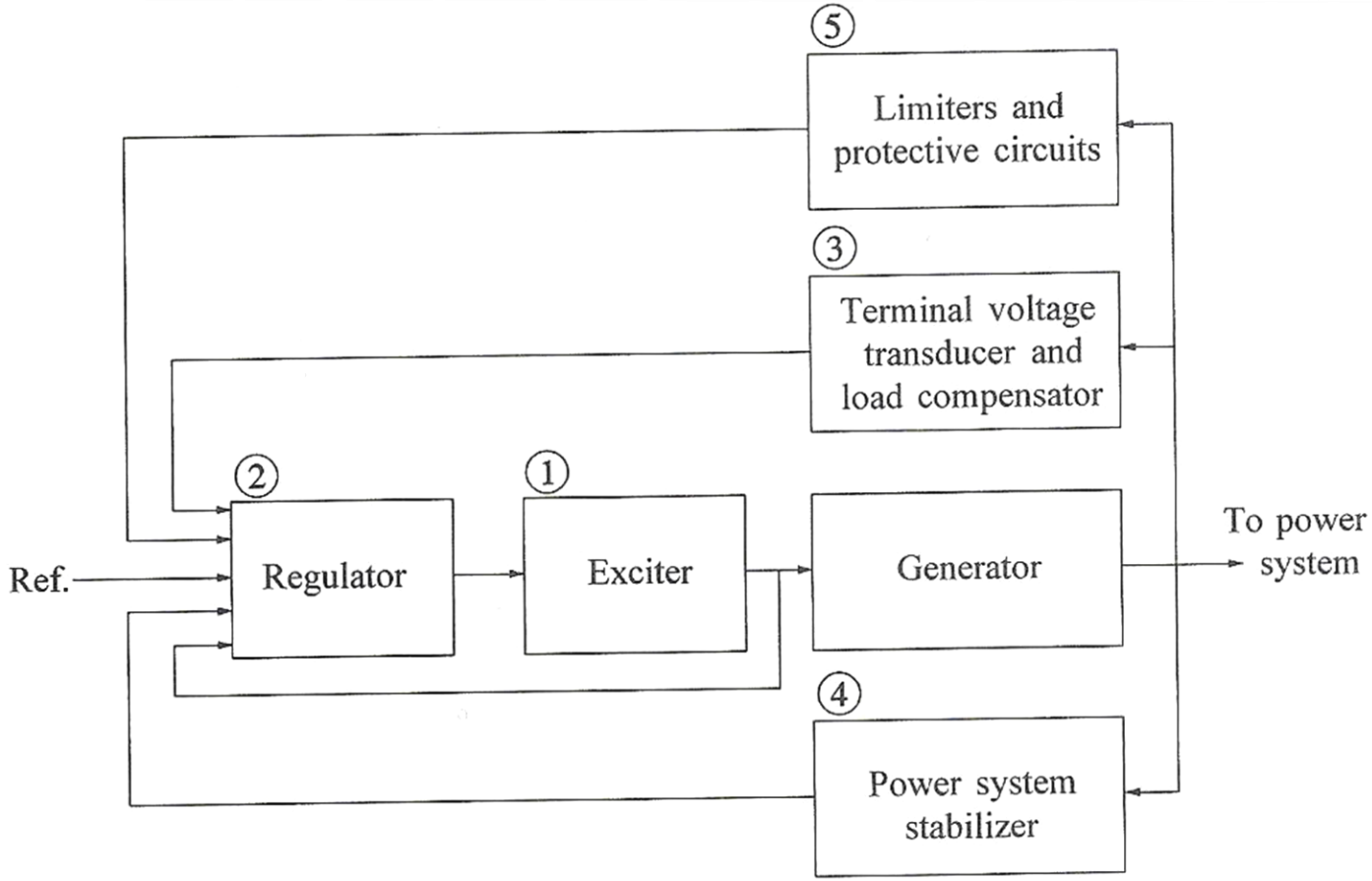

Image source: Fig 8.1 of Kundur, *Power System Stability and Control*

Potential Types of Exciters

- None, which would be the case for a permanent magnet generator
  - primarily used with wind turbines with ac-dc-ac converters
- DC: Utilize a dc generator as the source of the field voltage through slip rings
- AC: Use an ac generator on the generator shaft, with output rectified to produce the dc field voltage; brushless with a rotating rectifier system
- Static: Exciter is static, with field current supplied through slip rings

IEEET1 Exciter

- We'll start with a common exciter model, the IEEET1 based on a dc generator, and develop its structure
  - This model was standardized in a 1968 IEEE Committee Paper with Fig 1. from the paper shown below

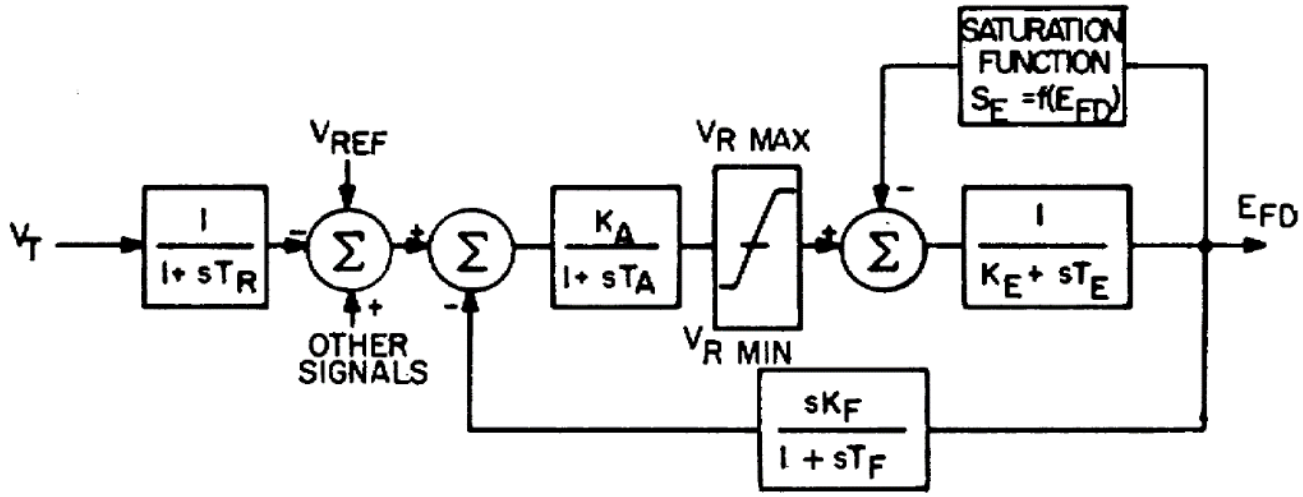

Fig. 1. Type 1 excitation system representation, continuously acting regulator and exciter.

Block Diagram Basics

- The following slides will make use of block diagrams to explain some of the models used in power system dynamic analysis. The next few slides cover some of the block diagram basics.
- To simulate a model represented as a block diagram, the equations need to be represented as a set of first order differential equations
- Also the initial state variable and reference values need to be determined

Integrator Block

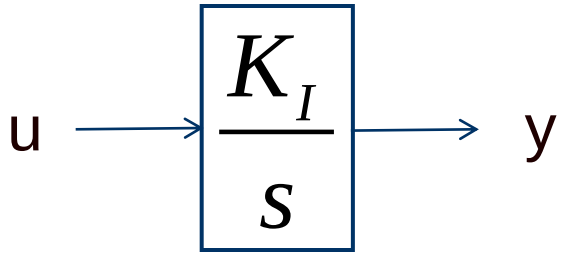

- Equation for an integrator with u as an input and y as an output is

$$\frac{dy}{dt} = K_I u$$

- In steady-state with an initial output of y_0, the initial state is y_0 and the initial input is zero

First Order Lag Block

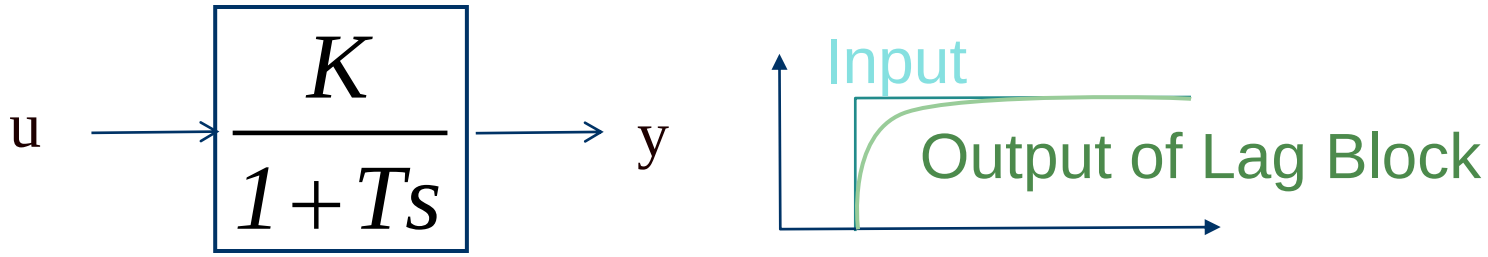

- Equation with u as an input and y as an output is

$$\frac{dy}{dt} = \frac{1}{T}(Ku - y)$$

- In steady-state with an initial output of y_0, the initial state is y_0 and the initial input is y_0/K
- Commonly used for measurement delay (e.g., T_R block with IEEE T1)

Derivative Block

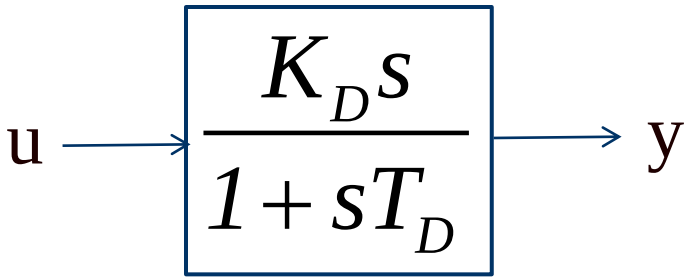

- Block takes the derivative of the input, with scaling K_D and a first order lag with T_D
  - Physically we can't take the derivative without some lag
  - An example is the feedback block in the IEEET1 model
- In steady-state the output of the block is zero
- State equations require a more general approach

State Equations for More Complicated Functions

- There is not a unique way of obtaining state equations for more complicated functions with a general form

$$\beta_0 u + \beta_1 \frac{du}{dt} + \cdots + \beta_m \frac{d^m u}{dt^m} =$$

$$\alpha_0 y + \alpha_1 \frac{dy}{dt} + \cdots + \alpha_{n-1} \frac{d^{n-1} y}{dt^{n-1}} + \frac{d^n y}{dt^n}$$

- To be physically realizable we need n >= m

General Block Diagram Approach

- One integration approach is illustrated in the below block diagram

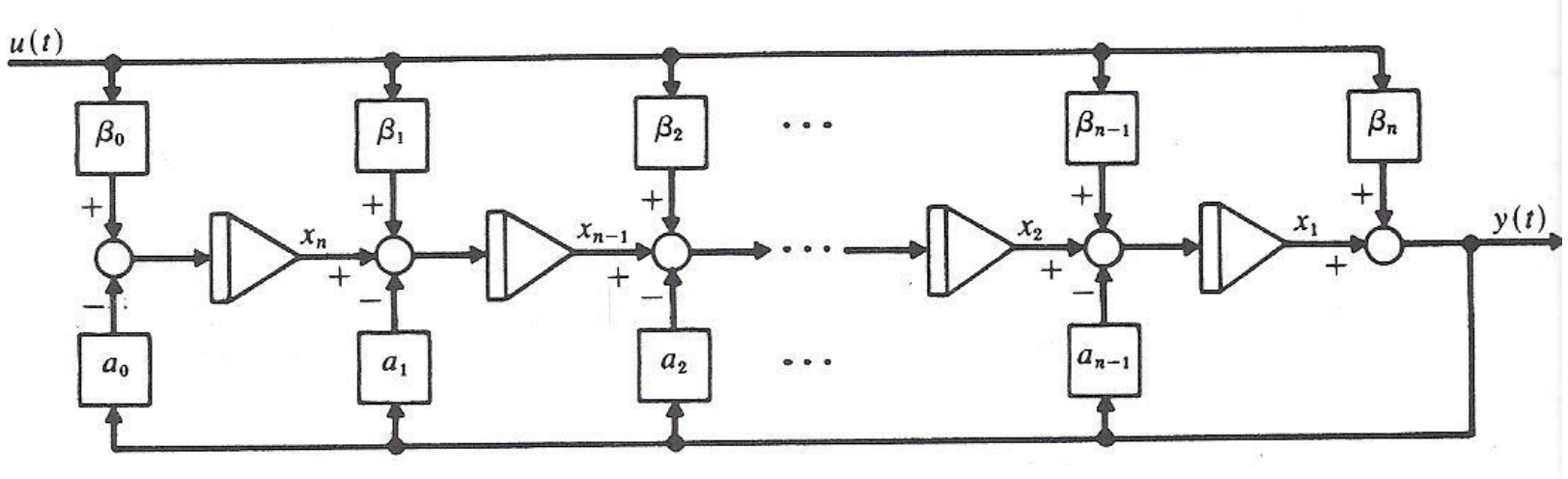

Image source: W.L. Brogan, *Modern Control Theory*, Prentice Hall, 1991, Figure 3.7

Derivative Example

- Write in form

$$\frac{K_D/T_D\, s}{1/T_D + s}$$

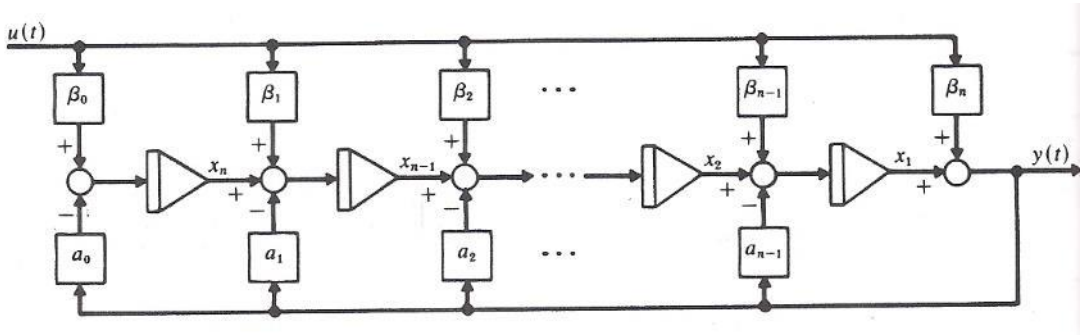

- Hence $\beta_0=0$, $\beta_1=K_D/T_D$, $\alpha_0=1/T_D$
- Define single state variable x, then

$$\frac{dx}{dt} = \beta_0 u - \alpha_0 y = -\frac{y}{T_D}$$

$$y = x + \beta_1 u = x + \frac{K_D}{T_D} u$$

Initial value of
x is found by recognizing
y is zero so $x = -\beta_1 u$

Lead-Lag Block

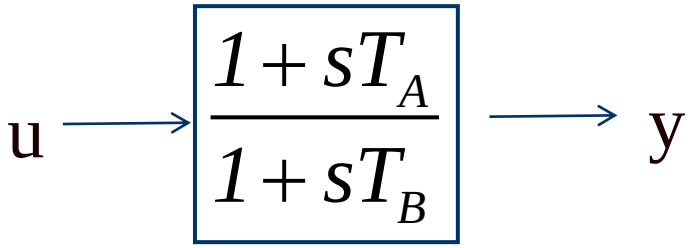

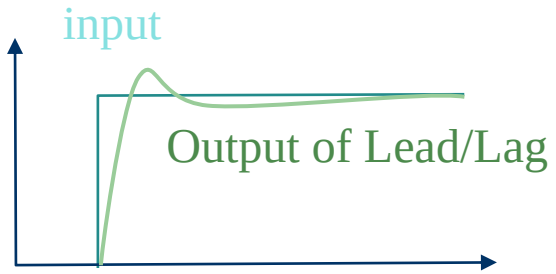

The steady-state requirement that u = y is readily apparent

- In exciters such as the EXDC1 the lead-lag block is used to model time constants inherent in the exciter; the values are often zero (or equivalently equal)
- In steady-state the input is equal to the output
- To get equations write in form with $\beta_0=1/T_B$, $\beta_1=T_A/T_B$, $\alpha_0=1/T_B$

$$\frac{1+sT_A}{1+sT_B} = \frac{\frac{1}{T_B}+s\frac{T_A}{T_B}}{1/T_B+s}$$

Lead-Lag Block

- The equations are with

$\beta_0=1/T_B$, $\beta_1=T_A/T_B$,
$\alpha_0=1/T_B$

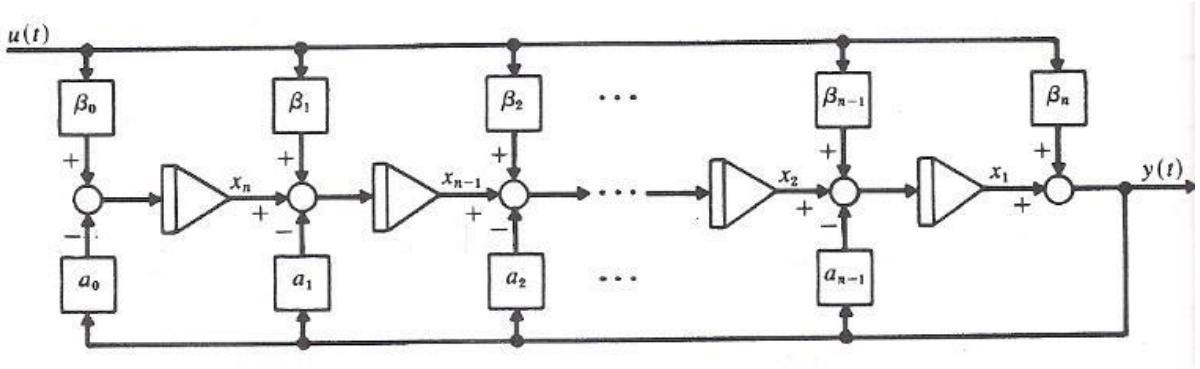

then

$$\frac{dx}{dt} = \beta_0 u - \alpha_0 y = \frac{1}{T_B}(u - y)$$

$$y = x + \beta_1 u = x + \frac{T_A}{T_B} u$$